SOMERVILLE ZONING ORDINANCE

January 22, 2015 BOA Submittal

Office of Strategic Planning & Community Development
Joseph A. Curtatone, Mayor

TABLE OF CONTENTS

ARTICLE 1: INTRODUCTORY PROVISIONS 1
General 3
Zoning Districts 4
Official Maps 4
Transition Rules 5
Adoption & Effect 5

ARTICLE 2: BASE DISTRICTS 7
Neighborhood Residence (NR) 9
Urban Residence (UR) 11
3-Story Mixed-Use (3MU) 13
4-Story Mixed-Use (4MU) 15
5-Story Mixed-Use (5MU) 17
7-Story Mixed-Use (7MU) 19
10-Story Mixed-Use (10MU) 21
Fabrication (FAB) 23
Commercial Industry (CI) 25
Civic (CIV) 27

ARTICLE 3. BUILDING STANDARDS 29
Building Types Overview 31
Standards for All Building Types 34
Principal Building Types 39
Building Components 73
Building Frontage Types 79
Outdoor Amenity Space 85
Building Design 86
Design Review 89

ARTICLE 4: SPECIAL DISTRICTS 91
Assembly Square (ASQ-SD) 93
Brickbottom (BB-SD) 103
Grand Junction (GJ-SD) 117
Inner Belt (IB-SD) 127
North Point (NP-SD) 137
Tufts University (TU-SD) 149
Floodplain Overlay (FO-SD) 155

ARTICLE 5: USE PROVISIONS 157
General 159
Principal Use Categories 160
Accessory Use Categories 172
Use Tables 175

ARTICLE 6: DEVELOPMENT STANDARDS 181
General 183
Accessory Structures 184
Wireless Communication Structures 187
Landscaping & Tree Preservation 189
Fences & Walls 191
Screening 192
Signs 193
Outdoor Lighting 208
Outdoor Cafe Seating 210

ARTICLE 7: PARKING, SERVICE, & MOBILITY 213
Bicycle Parking 215
Motor Vehicle Parking 219
Service Access 225
Mobility Management 226

ARTICLE 9: COMMUNITY BENEFITS 229
Affordable Housing 231
Linkage 234
Density Bonuses 235

ARTICLE 10: ADMINISTRATION 237
Standard Procedures 239
Preliminary Review 241
Administrative Development Review 244
Discretionary Development Review 253
Legislative Procedures 256
Appeals 259
Review boards & Officials 262

ARTICLE 11: NONCONFORMANCE 267
Nonconformance 269

ARTICLE 12: MEASUREMENT & DEFINITIONS 273
Measurement 275
Definitions 275

ARTICLE 1: INTRODUCTORY PROVISIONS

GENERAL....3
- Title 3
- Purpose 3
- Authority 3
- Applicability 3
- Compliance 3
- Conflicting Provisions 3
- Meaning & Intent 3
- Text & Graphics 4
- Severability & Invalidity 4

ZONING DISTRICTS....4
- Establishment of District Boundaries 4

OFFICIAL MAPS 4
- Zoning Map 4
- Transit Orientation Map 4
- Pedestrian Streets Map 4
- Zoning Atlas 5

TRANSITION RULES....5
- Previous Approvals 5

ADOPTION & EFFECT....5
- Adoption Date 5
- In Effect 5
- Published Notice 5
- Claim of Invalidity 5

A. GENERAL

1. TITLE

a. This Ordinance is known as the "Zoning Ordinance of the City of Somerville" and may also be cited and referred to as "Somerville Zoning Ordinance" and "SZO".

2. PURPOSE

a. To implement the comprehensive master plan of the City of Somerville and enforce other officially adopted plans and policies.
b. To coordinate development and redevelopment according to plans collaboratively developed with community members for each of Somerville's neighborhoods, squares, corridors, and special districts.
c. To equitably balance the regulation of real property with the interests of the community as a whole.
d. To develop and maintain complete, mixed-use, walkable, transit-oriented neighborhoods throughout the city.
e. To permit the activities customary to daily life within walking distance of most dwellings, providing accessibility to goods and services for all residents of Somerville including the disabled, elderly, young, low income, and those that do not drive or choose to own an automobile.
f. To provide distinct physical habitats at different scales, including the lot, block, street, and neighborhood, so that meaningful choices in living arrangement can be provided to residents with differing physical, social, and emotional needs.
g. To provide a range of housing types, unit sizes, and price points to accommodate the diverse household sizes, and life stages of Somerville residents at all income levels, paying particular attention to providing housing affordable to individuals and families with low and moderate incomes.
h. To capture a fiscal return on investments made in transportation infrastructure by locating higher intensity development, employment opportunities, and a broad mix of uses along major corridors and within walking distance of transit stops.
i. To preserve and enhance the existing character of Somerville's traditional residential housing and respect existing built form and development patterns.
j. To require a strong connection and gradual transition between the public realm (sidewalks, thoroughfares, and civic spaces) and private realm (yards and building interiors).
k. To promote the adaptation of existing buildings and permit redevelopment and infill construction that contributes to Somerville's architectural legacy, while respecting neighborhood character.
l. To preserve and expand the city's walkable network of human scaled thoroughfares and the small block and lot pattern of land subdivision.
m. To resolve design conflicts between vehicular and pedestrian movement in favor of the pedestrian.
n. To preserve and enhance the design of Somerville's public realm.
o. To protect and promote a diverse mix of businesses and increase accessibility to diverse employment opportunities within Somerville.
p. To conserve and restore Somerville's natural and historic resources.

3. AUTHORITY

a. This Ordinance is adopted under the authority granted by Article 89 of the Amendments to the Constitution of the Commonwealth of Massachusetts and enacted in accordance with the provisions of the Massachusetts General Laws (M.G.L.) Chapter 40A, as amended.

4. APPLICABILITY

a. Unless otherwise specified, this Ordinance is applicable to all real property within the City of Somerville.
b. All divisions, departments, commissions, boards, and authorities of the City of Somerville shall comply with the procedural requirements of this Ordinance.
c. Real property used or occupied by the City of Somerville is exempt from the provisions of this Ordinance.
d. Real property used of occupied by the Commonwealth of Massachusetts in conducting its essential government functions is exempt from the provisions of this Ordinance.

5. COMPLIANCE

a. No real property may be occupied or used; no use of an existing building or land may change; no sign may be erected, replaced, altered, refurbished, or otherwise modified; and no building or structure may be constructed, reconstructed, altered, expanded, or enlarged in whole or in part for any purpose except as specifically authorized by this Ordinance.
b. Nothing contained in this Ordinance shall be construed to restrict the use of land or structures for religious or educational activities per M.G.L. Chapter 40A, Section 3.

6. CONFLICTING PROVISIONS

a. This Ordinance does not abrogate, annul, or otherwise interfere with any easement, covenant, and/or other private agreements.
b. Where the provisions of this Ordinance impose a greater restriction than required by other ordinances, regulations, resolutions, rules, easements, covenants, or agreements, the provisions of this Ordinance shall apply.
c. All development activity must comply with relevant Federal and State law and regulations. Where the provisions of this Ordinance imposes a greater restriction than required by Federal or State law, the provisions of this Ordinance shall apply unless otherwise prohibited law.

7. MEANING & INTENT

a. Words, phrases, and terms used in this Ordinance are defined in Article 12. Measurement & Definitions.
b. Words, phrases, and terms not defined in Article 12 are subject to definition by the Commonwealth of Massachusetts State Building Code.
c. Words, phrases, and terms not defined by either Article 12 or the Commonwealth of Massachusetts State Building Code are subject to definition by the most recent edition of Webster's Unabridged Dictionary.
d. Words used or defined in one tense or form include other tenses and derivative forms.

e. Words in the singular or plural include the other, unless expressly excluded.
f. Words in the masculine or feminine include the other.
g. The words "must," "shall," "will", and "may not" are mandatory.
h. The words "may" and "should" are permissive.
i. The words building, building type, land, lot, parcel, premises, site, structure, and thoroughfare are construed as though followed by the words "or any portion thereof".
j. The words "used" or "occupied" include designed, arranged, intended, or offered for use or occupation.
k. The terms "standards," "regulations," and "requirements" are used to mandate a specific course of action or built outcome. Compliance with standards, regulations, and requirements is mandatory and indicated by use of the terms "must," "shall," "will", and/or "may not".
l. The term "guideline" is used for actions or built outcomes that are strongly encouraged to fulfill the intent of specific sections of this Ordinance. Guidelines are indicated by use of the terms "may" or "should."
m. Unless otherwise specifically indicated, lists of items or examples that use terms such as "for example," "including," and "such as," or similar language, are intended to provide examples and not as exhaustive lists of all possibilities.

8. TEXT & GRAPHICS

a. Illustrations, graphics, pictures, and flowcharts are included in this Ordinance to help illustrate the intent and requirement of the text. In the case of a conflict between the text of this Ordinance and any illustration, graphic, picture, or flowchart, the text shall govern.

9. SEVERABILITY & INVALIDITY

a. If any provision of this Ordinance or the application of any provision to any person, partnership, corporation, or circumstance is declared unconstitutional or otherwise held invalid, the validity of the remaining provisions of this Ordinance and their application to any other person, partnership, corporation, or circumstance shall not be affected.

B. ZONING DISTRICTS

1. ESTABLISHMENT OF DISTRICT BOUNDARIES

a. The boundaries of zoning districts described in Article 2: Base Districts and Article 4: Special Districts are applied to real property as shown on the Official Zoning Map.

C. OFFICIAL MAPS

1. ZONING MAP

a. Incorporation
   i. Zoning district boundaries are shown on the "Official Zoning Map of the City of Somerville"
   ii. This map may be cited and referred to as the "Official Zoning Map".
b. Boundaries
   i. Zoning district boundary lines are intended to follow lot lines, or be parallel or perpendicular to them, and along the centerlines of private rights-of-way, public alleys, and railroad rights-of-way as indicated on the Official Zoning Map.
   ii. Where the Official Zoning Map indicates a district boundary line that approximately coincides with a lot line, the lot line is the official boundary between districts.
   iii. Where the Official Zoning Map indicates a district boundary line that divides a platted lot or undivided parcel of land, the boundary between districts shall be determined using the scale of the Official Zoning Map.
c. Unmapped Land
   i. Any land not specifically included in any zoning district on the Official Zoning Map is subject to the provisions of Article 8: Public Realm Standards and classified as the Civic district unless rezoned according to the Map Amendment procedures of Article 10: Administration.

2. TRANSIT ORIENTATION MAP

a. Incorporation
   i. The boundary lines of transit oriented areas are shown on the "Official Transit Orientation Map of the City of Somerville".
   ii. This map may be cited and referred to as the "Transit Orientation Map".
   iii. The Transit Orientation Map is part of the Official Zoning Map as established in §1.C.1. Zoning Map.
b. Purpose
   i. The Transit Orientation Map is used to coordinate parking standards and affordable housing requirements by:
      a). identifying 'transit oriented' areas of the city that are in close proximity to a current or proposed MBTA rail transit station; and
      b). ranking these transit oriented areas based on the presence of uses providing convenient access to daily & weekly needs.
c. Boundaries
   i. Boundary lines are intended to follow lot lines, or be parallel or perpendicular to them, and along the centerlines of private rights-of-way, including alleys, streets, and railroads, as indicated on the Transit Orientation Map.
   ii. Where the Transit Orientation Map indicates a boundary that approximately coincides with lot lines, those lot lines shall be the official boundary between districts.

3. PEDESTRIAN STREETS MAP

a. Incorporation
   i. Pedestrian oriented block faces are shown on the "Official Pedestrian Streets Map of the City of Somerville".
   ii. This map may be cited and referred to as the "Pedestrian Streets Map".
   iii. The Pedestrian Streets Map is part of the Official Zoning Map as established in §1.C.1. Zoning Map.
b. Purpose
   i. The Pedestrian Streets Map identifies block faces along certain thoroughfares as places prioritized for pedestrian activity. Article 8: Public Realm Standards

for more information.

c. Interpretation
   i. Pedestrian street designation is intended to include the entirety of each designated block face. Where the Pedestrian Streets Map indicates a designation that identifies only part of block face, the length of the designation shall be one hundred (100) feet of the front lot line or combination of front lot lines extending from the corner of the block.

4. ZONING ATLAS

a. Digital and print editions of the maps established in §1.C. Official Maps are maintained by the Office of Strategic Planning and Community Development together as the "Official Zoning Atlas of the City of Somerville".
b. This atlas may be cited and referred to as the "Official Zoning Atlas".
c. The Official Zoning Atlas may be supplemented by additional layers or separate maps to the atlas sheets when the scale of the atlas sheets does not adequately illustrate the details of boundaries or designations of a particular area.

D. TRANSITION RULES

1. PREVIOUS APPROVALS

a. Any building permit, zoning permit, site development plan approval, large development plan approval, neighborhood development plan approval, special permit, or variance, or subdivision plan approval issued prior to the first publication of public notice for the public hearing for this Ordinance, or any amendment to this Ordinance, shall remain valid, subject to all conditions attached to the approval.

E. ADOPTION & EFFECT

1. ADOPTION DATE

a. This Ordinance was adopted by the Board of Aldermen on Month, XX, 201X.

2. IN EFFECT

a. This Ordinance shall take effect upon its passage and supersedes the Zoning Ordinance of the City of Somerville as adopted on March, 23, 1990, as amended.

3. PUBLISHED NOTICE

a. Per MGL 40 Section 32, notice of the adoption of this Ordinance, or any amendment to this Ordinance, shall be published at least two times in a newspaper of general circulation without delay upon its adoption by the Board of Aldermen and signing into law by the Mayor. Failure to publish this notice shall not affect the validity of this Ordinance or its amendments.

4. CLAIM OF INVALIDITY

a. No claim of invalidity of this Ordinance shall be made in any legal proceeding after ninety (90) days have passed following the publication of notice of adoption.
b. Notice specifying the court, parties, claim of invalidity, and date of filing shall be submitted to the Office of the City Clerk within seven (7) days after commencement of such action.

ARTICLE 2: BASE DISTRICTS

NEIGHBORHOOD RESIDENCE (NR) 9
- Intent 9
- Purpose 9
- Building Standards 9
- Use Provisions 10
- Development Review 10

URBAN RESIDENCE (UR) 11
- Intent 11
- Purpose 11
- Building Standards 11
- Development Review 12

3-STORY MIXED-USE (3MU) 13
- Intent 13
- Purpose 13
- Building Standards 13
- Parking & Access 14
- Development Review 14

4-STORY MIXED-USE (4MU) 15
- Intent 15
- Purpose 15
- Building Standards 15
- Parking & Access 16
- Development Review 16

5-STORY MIXED-USE (5MU) 17
- Intent 17
- Purpose 17
- Building Standards 17
- Use Provisions 18
- Parking 18
- Development Review 18

7-STORY MIXED-USE (7MU) 19
- Intent 19
- Purpose 19
- Building Standards 19
- Use Provisions 20
- Parking & Access 20
- Public Realm 20
- Development Review 20

10-STORY MIXED-USE (10MU) 21
- Intent 21
- Purpose 21
- Building Standards 21
- Use Provisions 22
- Parking & Access 22
- Public Realm 22
- Development Review 22

FABRICATION (FAB) 23
- Intent 23
- Purpose 23
- Building Standards 23
- Development Review 24

COMMERCIAL INDUSTRY (CI) 25
- Intent 25
- Purpose 25
- Building Standards 25
- Development Review 26

CIVIC (CIV) 27
- Intent 27
- Purpose 27
- Building Standards 27

A. NEIGHBORHOOD RESIDENCE (NR)

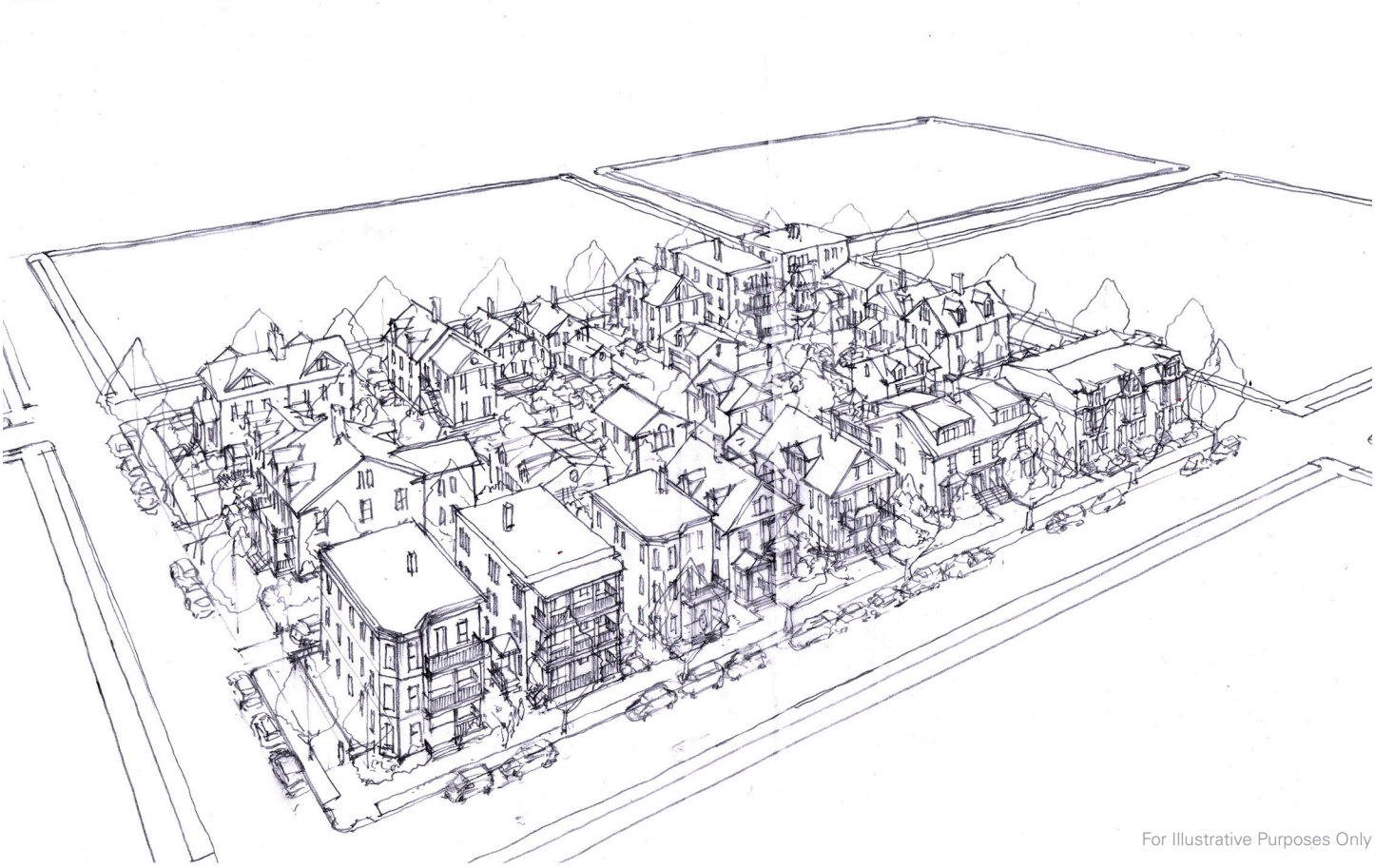

For Illustrative Purposes Only

1. INTENT

a. To conserve already established areas of detached and semi-detached residential building types.

2. PURPOSE

a. To permit the development of one- & two-unit detached and semi-detached residential building types on individual lots.
b. To provide for the discretionary review of three-unit detached and semi-detached residential building types on individual lots.
c. To permit the adaptive reuse of already existing civic & institutional facilities as arts & creative enterprise uses.
d. To permit the adaptive reuse of already existing commercial buildings as neighborhood stores.
e. To promote diversity in housing, including unit type, size, bedroom count, and affordability.
f. To provide the community with a predictable outcome from development and redevelopment.

3. BUILDING STANDARDS

a. Permitted Building Types

i. The following building types are permitted in the Neighborhood Residence district:

Y	Cottage	**L**	Shop House
Y	House	**L**	Neighborhood Store
Y	Paired House	N	Mixed-Use Building
Y	Duplex	N	Commercial Building
SP	Triple Decker	N	Production Building
SP	Paired Triple Decker	N	Fabrication Loft
N	Four Plex		
N	Six Plex		
N	Apartment House		
N	Apartment Building		
N	Row Houses		

Y	by Right
L	by Right with Limitations
SDP	by Site Development Plan
SP	by Special Permit
N	Not Permitted

ii. See Article 3. Building Standards for the standards for each type.

b. Building Type Limitations
   i. A Shop House or Neighborhood Store building type may be established according to the following:
      a). Location
         i). A Shop House or Neighborhood Store is only permitted as follows:
            a. On a corner lot; or
            b. In any building constructed before the effective date of this ordinance for non-residential use, as established by permit records or other historical documents accepted by the Building Official.
         ii). A Shop House or Neighborhood Store is prohibited on any lot fronting onto a dead end thoroughfare.
      b). Use Restrictions
         i). The use of a Shop House or Neighborhood Store building type is limited to the following use subcategories:
            a. Arts Sales & Service
            b. Creative Studio
            c. Design Services
            d. Consumer Goods
            e. Fresh Food Market and/or Grocery Store
         ii). The sale of alcoholic beverages for on-site consumption is prohibited.
         iii). Business operations are permitted between the hours of 7:00am to 9:00pm only.

4. USE PROVISIONS

a. Adaptive Re-Use of Specific Buildings
   i. Any building constructed before the effective date of this Ordinance for a use that is considered nonconforming in the Neighborhood Residence district, as established by permit records or other historical documents accepted by the Building Official, or any building used for municipal operations by the City of Somerville may be changed to any use within the following Arts & Creative Enterprise use subcategories:
      a). Artisan Production;
      b). Arts Sales & Services; or
      c). Design Services
      d). Shared Workspace & Arts Education.

5. DEVELOPMENT REVIEW

a. Preliminary Review
   i. Development of any building type permitted "by-right with limitations" or "by Special Permit" requires a neighborhood meeting prior to submittal of an application for development review. See §10.B.2. Neighborhood Meeting for more information.
   ii. Development of a Shop House or Neighborhood Store requires design review by the Urban Design Commission. See §10.B.3. Design Review for more information.
b. Administrative Development Review
   i. Building types permitted "by-right" require only a zoning permit. See §10.C.1. Zoning Permit for more information.
   ii. Building types permitted "by-right with limitations" require only a zoning permit, subject to the limitations identified for each type in §2.A.3.b. Building Type Limitations. See §10.C.1. Zoning Permit for more information.
c. Discretionary Development Review
   i. The Zoning Board of Appeals is the review board for all Special Permit applications required for development within the NR district.
   ii. Building types permitted "by Special Permit" require a special permit as a prerequisite to a the issuance of a zoning permit. See §10.D.1. Special Permit for more information.
   iii. The alteration or renovation of an existing building that results in any increase of the number of dwelling units requires a special permit in accordance with §10.D.1. Special Permit.
   iv. Special Permit Findings
      a). In its discretion to approve or deny a special permit authorizing an increase in the number of dwelling units in an existing building, the Zoning Board of Appeals, shall consider the following:
         i). the review considerations for all Special Permits as specified in §10.D.1.e. Review Criteria; and
         ii). quality of the living space in terms of functional area and access to light and air circulation.
      b). In its discretion to approve or deny a special permit authorizing a triple decker, the Zoning Board of Appeals, shall consider the following:
         i). the review considerations for all Special Permits as specified in §10.D.1.e. Review Criteria;
         ii). the impact on solar access from the introduction of a flat roofed building on adjacent properties;
         iii). existing context of immediately abutting properties; and
         iv). existing context of properties fronting each block face of the abutting thoroughfare.
      c). In its discretion to approve or deny a special permit authorizing a paired triple decker, the Zoning Board of Appeals, shall consider the following:
         i). the review considerations for all Special Permits as specified in §10.D.1.e. Review Criteria;
         ii). the impact on solar access from the introduction of a flat roofed building on adjacent properties;
         iii). existing context of immediately abutting properties;
         iv). existing context of properties fronting each block face of the abutting thoroughfare.

B. URBAN RESIDENCE (UR)

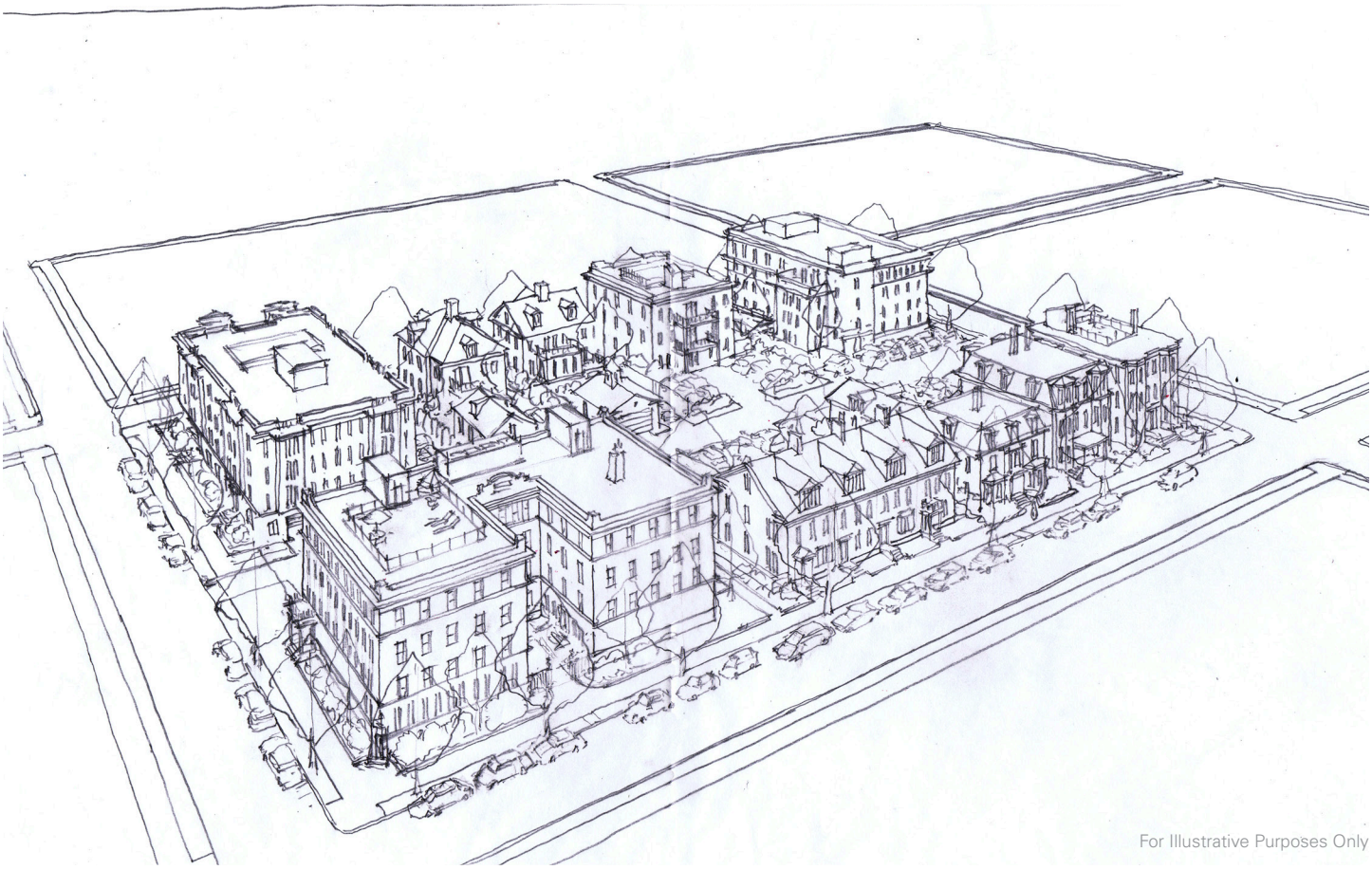

For Illustrative Purposes Only

1. INTENT

a. To create, maintain, and enhance areas appropriate for multi-unit residential building types.

2. PURPOSE

a. To regulate the development of multi-unit residential building types.
b. To permit the adaptive reuse of existing non-residential buildings for residential use.
c. To promote diversity in housing, including unit type, size, bedroom count, and affordability.
d. To provide the community with a predictable outcome from development and redevelopment.

3. BUILDING STANDARDS

a. Permitted Building Types

i. The following building types are permitted in the Urban Residence district:

N	Cottage	**L**	Shop House
N	House	**L**	Neighborhood Store
N	Paired House	N	Mixed-Use Building
N	Duplex	N	Commercial Building
N	Triple Decker	N	Production Building
Y	Paired Triple Decker	N	Fabrication Loft
Y	Four Plex		
Y	Six Plex		
Y	Apartment House		
SDP	Apartment Building		
SDP	Row Houses		

Y	by Right
L	by Right with Limitations
SDP	by Site Development Plan
SP	by Special Permit
N	Not Permitted

ii. See Article 3. Building Standards for the standards for each type.

b. Building Type Limitations
   i. A Shop House or Neighborhood Store building type may be established according to the following:
      a). Location
         i). A Shop House or Neighborhood Store is only permitted as follows:
            a. On a corner lot; or
            b. In any building constructed before the effective date of this ordinance for non-residential use, as established by permit records or other historical documents accepted by the Building Official.
         ii). A Shop House or Neighborhood Store is prohibited on any lot fronting onto a dead end thoroughfare.
      b). Use Restrictions
         i). The use of a Shop House or Neighborhood Store building type is limited to the following use subcategories:
            a. Arts Sales & Service
            b. Creative Studio
            c. Design Services
            d. Consumer Goods
            e. Fresh Food Market and/or Grocery Store
         ii). The sale of alcoholic beverages for on-site consumption is prohibited.
         iii). Business operations are permitted only between the hours of 7:00am to 9:00pm.

4. DEVELOPMENT REVIEW

a. Preliminary Review
   i. A neighborhood meeting, in accordance with the provisions of §10.B.2. Neighborhood Meeting, is required for the following building types:
      a). Apartment Building
      b). Row Houses
      c). Shop House
      d). Neighborhood Store
   ii. Design review, in accordance with the provisions of §10.B.3. Design Review, is required for the following building types:
      a). Apartment Building
      b). Row Houses
      c). Shop House
      d). Neighborhood Store
b. Administrative Development Review
   i. Building types permitted "by-right" require a only a zoning permit. See §10.C.1. Zoning Permit for more information.
   ii. Building types permitted "by-right with limitations" require only a zoning permit, subject to the limitations identified for each type in §2.B.3.b. Building Type Limitations. See §10.C.1. Zoning Permit for more information.
   iii. Building types permitted by "site development plan" require site development plan approval as a prerequisite to a the issuance of a zoning permit. See §10.C.5. Site Development Plan Approval for more information.

C. 3-STORY MIXED-USE (3MU)

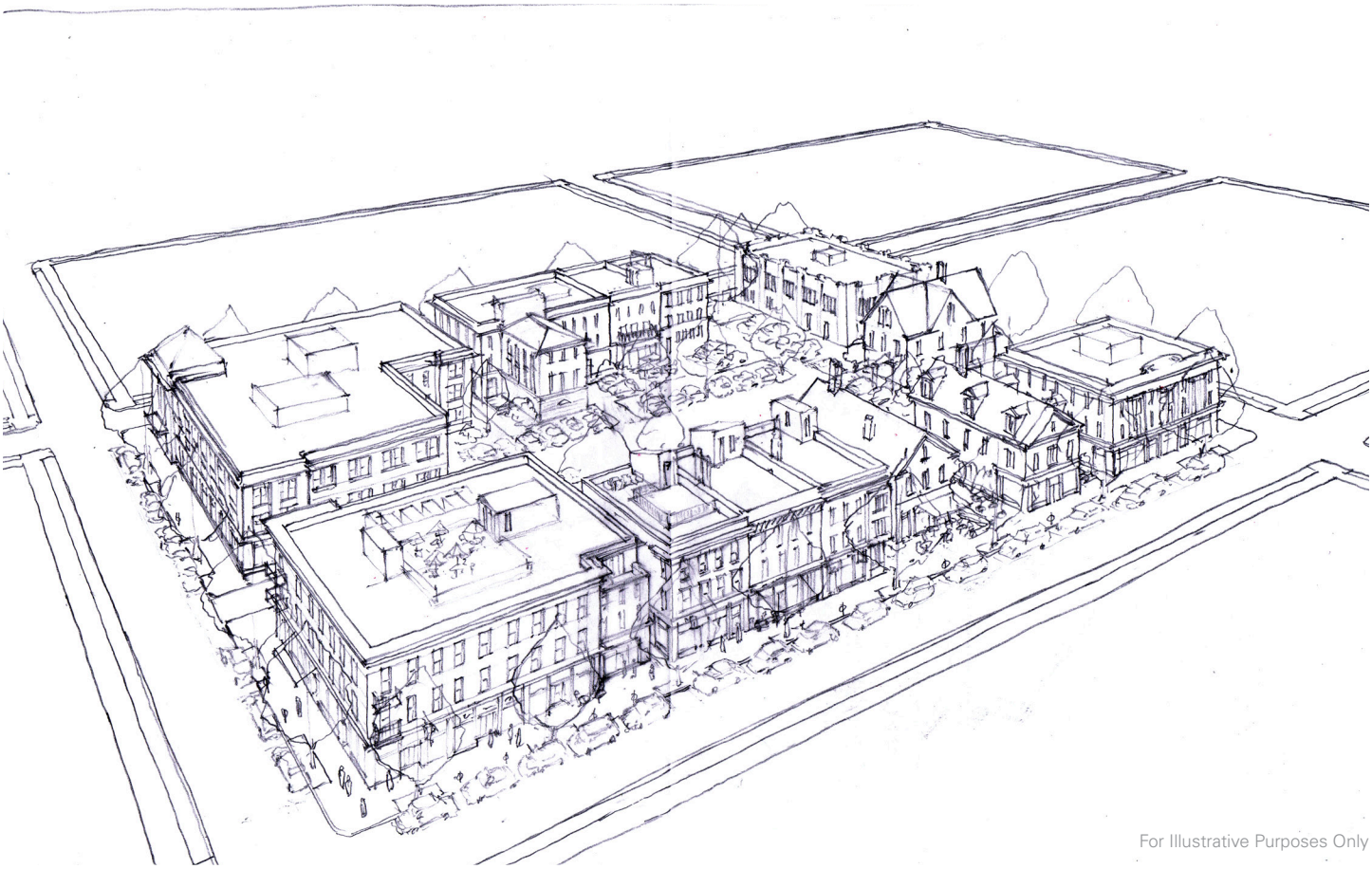

For Illustrative Purposes Only

1. INTENT

a. To accommodate small-scale, mixed-use and commercial building-types that do not exceed three (3) stories in height and low-impact, neighborhood serving commercial uses.

2. PURPOSE

a. To permit the development of apartment, mixed-use, and commercial building types.
b. To promote diversity in housing, including unit type, size, bedroom count, and affordability.
c. To promote housing for smaller households on the upper floors of mixed-use buildings.
d. To promote quality commercial space for neighborhood serving commercial uses.
e. To provide the community with a predictable outcome from development and redevelopment.

3. BUILDING STANDARDS

a. Permitted Building Types

i. The following building types are permitted in the 3-Story Mixed-Use district:

N	Cottage	**SDP**	Shop House
N	House	N	Neighborhood Store
N	Paired House	**SDP**	Mixed-Use Building
N	Duplex	**SDP**	Commercial Building
N	Triple Decker	N	Production Building
N	Paired Triple Decker	N	Fabrication Loft
N	Four-Plex		
N	Six-Plex		
N	Apartment House		
SDP	Apartment Building		
N	Row Houses		

Y	by Right
L	by Right with Limitations
SDP	by Site Development Plan
SP	by Special Permit
N	Not Permitted

ii. See Article 3. Building Standards for the standards for each type.

4. PARKING & ACCESS

a. Surface parking lots providing more than six (6) total spaces are prohibited.

5. DEVELOPMENT REVIEW

a. Preliminary Review
   i. A neighborhood meeting, in accordance with the provisions of §10.B.2. Neighborhood Meeting, is required for all building types.
   ii. Design review, in accordance with the provisions of §10.B.3. Design Review, is required for ~~the following~~ all building types.

b. Administrative Development Review
   i. Building types permitted by "site development plan" require site development plan approval as a prerequisite to a the issuance of a zoning permit. See §10.C.5. Site Development Plan Approval for more information.

D. 4-STORY MIXED-USE (4MU)

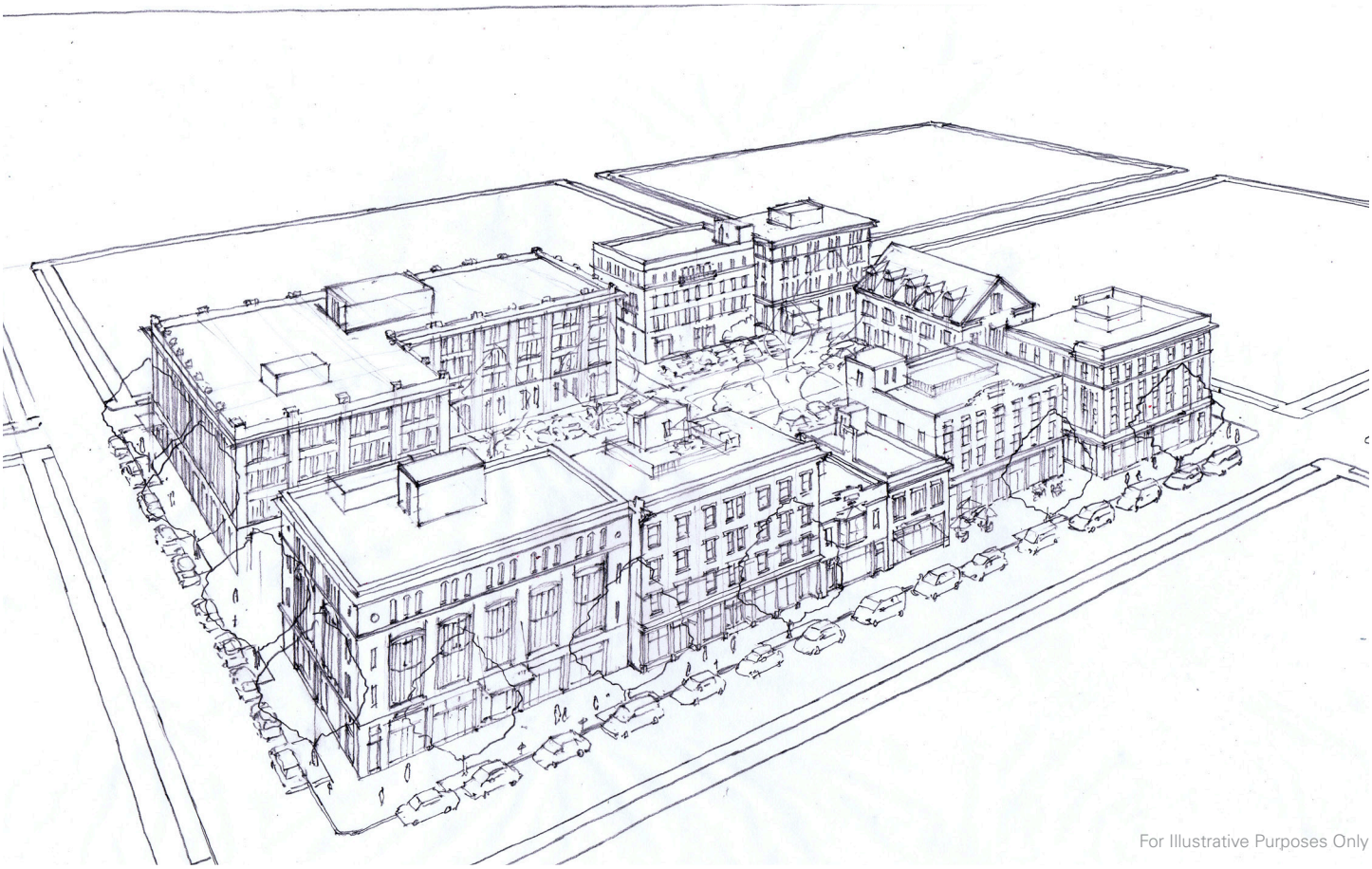

For Illustrative Purposes Only

1. INTENT

a. To accommodate small- and medium-scale, mixed-use building types that do not exceed four (4) stories in height and neighborhood-serving commercial uses that provide convenient access to daily needs.

2. PURPOSE

a. To permit the development of mixed-use and commercial building types.
b. To promote diversity in housing, including unit type, size, bedroom count, and affordability.
c. To promote housing for smaller households on the upper floors of residential mixed-use buildings.
d. To promote quality commercial space for neighborhood serving commercial uses.
e. To provide the community with a predictable outcome from development and redevelopment.

3. BUILDING STANDARDS

a. Permitted Building Types

i. The following building types are permitted in the 4-Story Mixed-Use district:

N	Cottage	N	Shop House
N	House	N	Neighborhood Store
N	Paired House	**SDP**	Mixed-Use Building
N	Duplex	**SDP**	Commercial Building
N	Triple Decker	N	Production Building
N	Paired Triple Decker	N	Fabrication Loft
N	Row House		
N	Four-Plex		
N	Six-Plex		
N	Apartment House		
SDP	Apartment Building		
N	Townhouse Building		

Y by Right
L by Right with Limitations
SDP by Site Development Plan
SP by Special Permit
N Not Permitted

ii. See Article 3. Building Standards for the standards for each type.

4. PARKING & ACCESS

a. Surface parking lots providing more than six (6) total spaces are prohibited.

5. DEVELOPMENT REVIEW

a. Preliminary Review
   i. A neighborhood meeting, in accordance with the provisions of §10.B.2. Neighborhood Meeting, is required for all building types.
   ii. Design review, in accordance with the provisions of §10.B.3. Design Review, is required for the following all building types.

b. Administrative Development Review
   i. Building types permitted by "site development plan" require site development plan approval as a prerequisite to a the issuance of a zoning permit. See §10.C.5. Site Development Plan Approval for more information.

E. 5-STORY MIXED-USE (5MU)

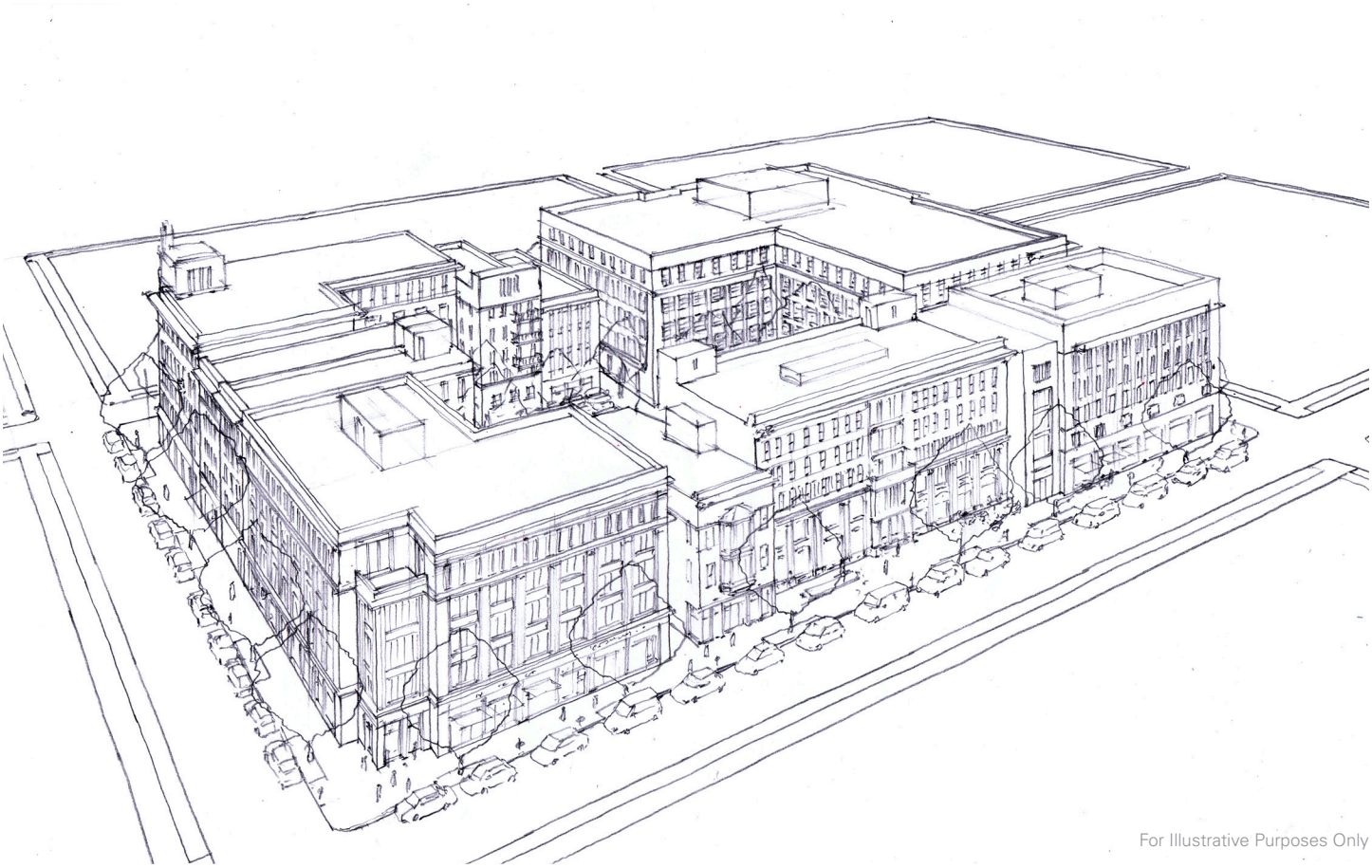

For Illustrative Purposes Only

1. INTENT

a. To accommodate small- and medium-scale, mixed-use building types that do not exceed five (5) stories in height and a mix of neighborhood- and community-serving commercial uses.

2. PURPOSE

a. To permit the development of apartment, mixed-use, and commercial building types.
b. To promote diversity in housing, including unit type, size, bedroom count, and affordability.
c. To promote housing for smaller households on the upper floors of residential mixed-use buildings.
d. To promote quality commercial space for neighborhood- and community-serving commercial uses.
e. To provide the community with a predictable outcome from development and redevelopment.

3. BUILDING STANDARDS

a. Permitted Building Types

i. The following building types are permitted in the 5-Story Mixed-Use district:

N	Cottage
N	House
N	Paired House
N	Duplex
N	Triple Decker
N	Paired Triple Decker
N	Row House
N	Four-Plex
N	Six-Plex
N	Apartment House
SDP	Apartment Building
N	Townhouse Building
N	Shop House
N	Neighborhood Store
SDP	Mixed-Use Building
SDP	Commercial Building
N	Production Building
N	Fabrication Loft

Y	by Right
L	by Right with Limitations
SDP	by Site Development Plan
SP	by Special Permit
N	Not Permitted

ii. See Article 3. Building Standards for the standards for each type.

4. USE PROVISIONS

a. Required Uses
   i. A minimum of five percent (5%) of the gross floor area of any Mixed-Use Building or Commercial Building must be provided as leasable floor area for uses from the Arts & Creative Enterprise use category.

5. PARKING

a. If provided, off-street parking must be located underground or in structures and accessed from an alley.

6. DEVELOPMENT REVIEW

a. Preliminary Review
   i. A neighborhood meeting, in accordance with the provisions of §10.B.2. Neighborhood Meeting, is required for all building types.
   ii. Design review, in accordance with the provisions of §10.B.3. Design Review, is required for all building types.
b. Administrative Development Review
   i. Building types permitted by "site development plan" require site development plan approval as a prerequisite to a the issuance of a zoning permit. See §10.C.5. Site Development Plan Approval for more information.

F. 7-STORY MIXED-USE (7MU)

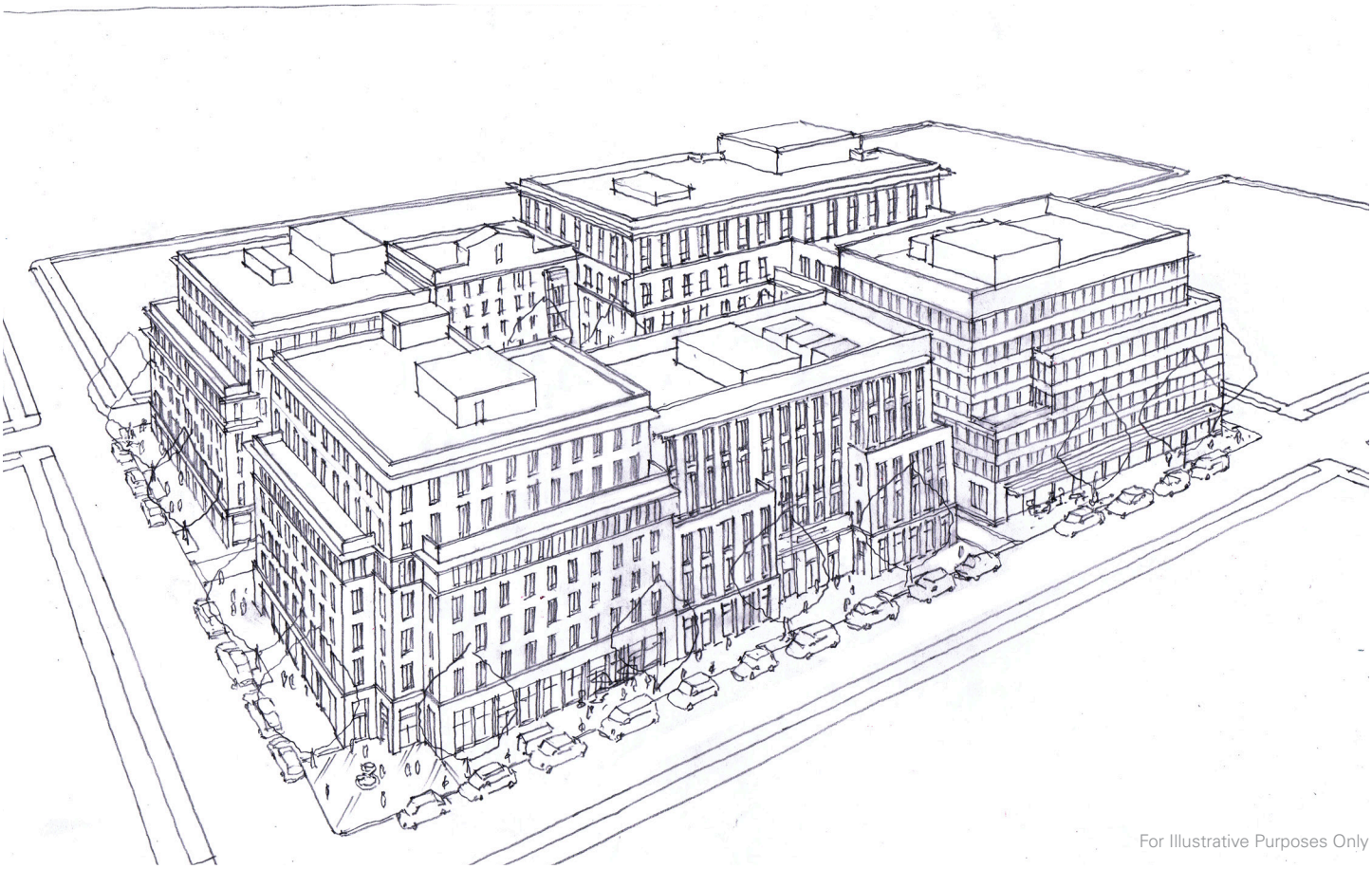

For Illustrative Purposes Only

1. INTENT

a. To accommodate medium- and large-scale, mixed-use building types that do not exceed seven (7) stories in height and an intense mix of neighborhood-, community- and region-serving commercial uses.

2. PURPOSE

a. To permit the development of apartment, mixed-use, and commercial building types.
b. To promote diversity in housing, including unit type, size, bedroom count, and affordability.
c. To promote quality commercial space for neighborhood-, community-, and region-serving commercial uses.
d. To provide the community with a predictable outcome from development and redevelopment.

3. BUILDING STANDARDS

a. Permitted Building Types

i. The following building types are permitted in the 7-Story Mixed-Use district:

N	Cottage	N	Shop House
N	House	N	Neighborhood Store
N	Paired House	**SDP**	Mixed-Use Building
N	Duplex	**SDP**	Commercial Building
N	Triple Decker	N	Production Building
N	Paired Triple Decker	N	Fabrication Loft
N	Row House		
N	Four-Plex		
N	Six-Plex		
N	Apartment House		
SDP	Apartment Building		
N	Townhouse Building		

Y by Right
L by Right with Limitations
SDP by Site Development Plan
SP by Special Permit
N Not Permitted

ii. See Article 3. Building Standards for the standards for each type.

4. USE PROVISIONS

a. Required Uses
   i. A minimum of five percent (5%) of the gross floor area of any Mixed-Use Building or Commercial Building must be provided as leasable floor area for uses from the Arts & Creative Enterprise use category.

5. PARKING & ACCESS

a. If provided, off-street parking must be located underground or in structures and accessed from an alley.
b. Vehicular entrances to parking lots, parking structures, loading docks, and service areas are not permitted on primary front lot lines.

6. PUBLIC REALM

a. Sidewalks
   i. When development occurs on any lot abutting a thoroughfare where the sidewalk is less than twelve (12) feet in width, the building must be setback an additional distance to accommodate expansion of the abutting sidewalk to a width of at least twelve (12) feet. The minimum and maximum front setback for each building type is adjusted accordingly.
b. Open Space
   i. At least fifteen percent (15%) of total land area of each lot must be open space.
   ii. Open space may be designed as a either increased sidewalk width, a mid-block passage, civic space, publicly-accessible courtyard with no less than thirty percent (30%) landscaped, or outdoor recreation facilities.

7. DEVELOPMENT REVIEW

a. Preliminary Review
   i. A neighborhood meeting, in accordance with the provisions of §10.B.2. Neighborhood Meeting, is required for all building types.
   ii. Design review, in accordance with the provisions of §10.B.3. Design Review, is required for all building types.
b. Administrative Development Review
   i. Building types permitted by "site development plan" require site development plan approval as a prerequisite to a the issuance of a zoning permit. See §10.C.5. Site Development Plan Approval for more information.

G. 10-STORY MIXED-USE (10MU)

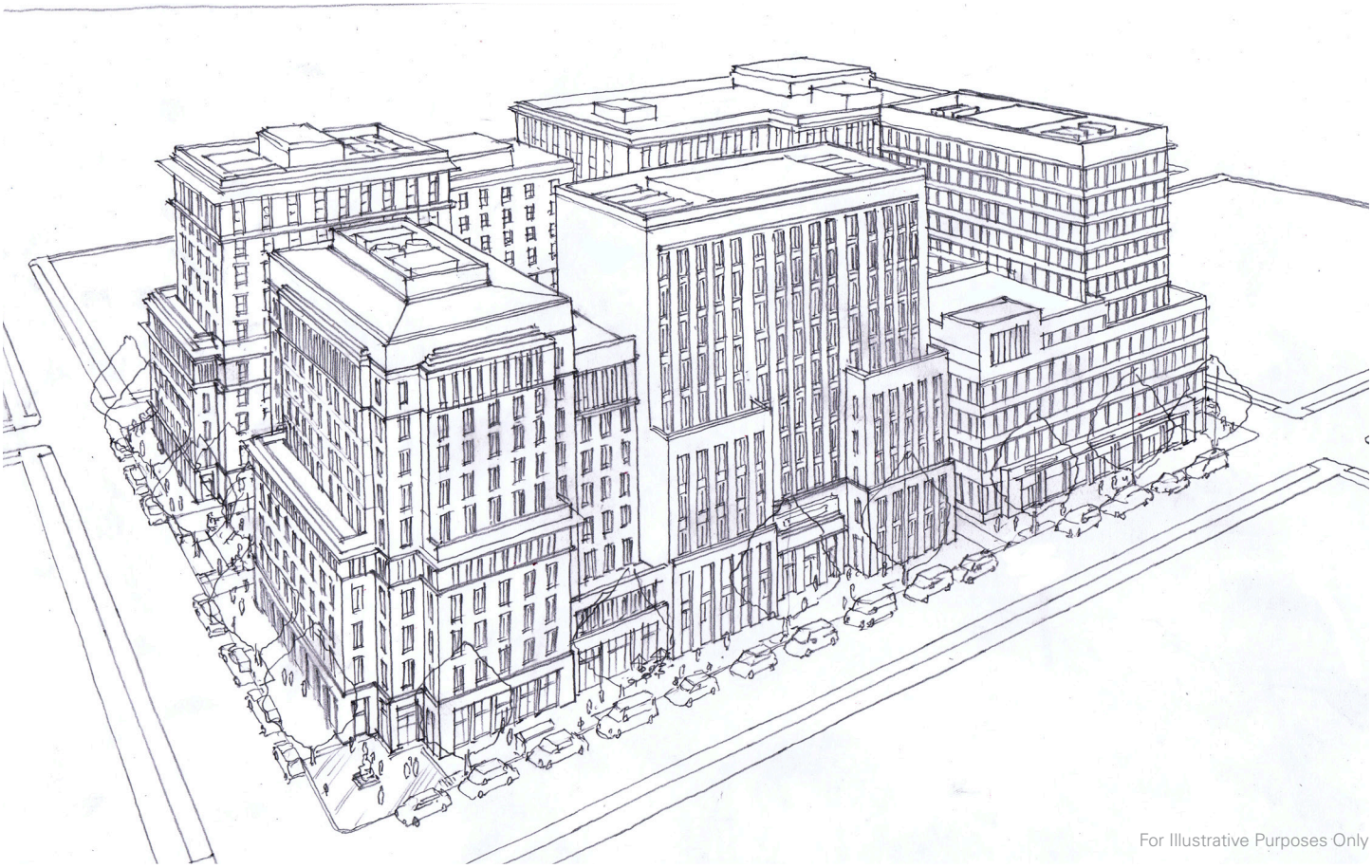

For Illustrative Purposes Only

1. INTENT

a. To accommodate medium- and large-scale, mixed-use building types that do not exceed ten (10) stories in height and an intense mix of neighborhood-, community- and region-serving commercial uses.

2. PURPOSE

a. To permit the development of apartment, mixed-use, and commercial building types.
b. To promote diversity in housing, including unit type, size, bedroom count, and affordability.
c. To promote quality commercial space for neighborhood-, community-, and region-serving commercial uses.
d. To provide the community with a predictable outcome from development and redevelopment.

3. BUILDING STANDARDS

a. Permitted Building Types

i. The following building types are permitted in the 10-Story Mixed-Use district:

N	Cottage	N	Shop House
N	House	N	Neighborhood Store
N	Paired House	**SDP**	Mixed-Use Building
N	Duplex	**SDP**	Commercial Building
N	Triple Decker	N	Production Building
N	Paired Triple Decker	N	Fabrication Loft
N	Row House		
N	Four-Plex		
N	Six-Plex		
N	Apartment House		
SDP	Apartment Building		
N	Townhouse Building		

P by Right
L by Right with Limitations
SDP by Site Development Plan
SP by Special Permit
N Not Permitted

ii. See Article 3. Building Standards for the standards for each type.

4. USE PROVISIONS

a. Required Uses
   i. A minimum of five percent (5%) of the gross floor area of any Mixed-Use Building or Commercial Building must be provided as leasable floor area for uses from the Arts & Creative Enterprise use category.

5. PARKING & ACCESS

a. If provided, off-street parking must be located underground or in structures and accessed from an alley.
b. Vehicular entrances to parking lots, parking structures, loading docks, and service areas are not permitted on primary front lot lines.

6. PUBLIC REALM

a. Sidewalks
   i. When development occurs on any lot abutting a thoroughfare where the sidewalk is less than twelve (12) feet in width, the building must be setback an additional distance to accommodate expansion of the abutting sidewalk to a width of at least twelve (12) feet. The minimum and maximum front setback for each building type is adjusted accordingly.
b. Open Space
   i. At least fifteen percent (15%) of total land area of each lot must be open space.
   ii. Open space may be designed as a either increased sidewalk width, a mid-block passage, civic space, a publicly-accessible courtyard with no less than thirty percent (30%) landscaping, or outdoor recreation facilities.

7. DEVELOPMENT REVIEW

a. Preliminary Review
   i. A neighborhood meeting, in accordance with the provisions of §10.B.2. Neighborhood Meeting, is required for all building types.
   ii. Design review, in accordance with the provisions of §10.B.3. Design Review, is required for all building types.
b. Administrative Development Review
   i. Building types permitted by "site development plan" require site development plan approval as a prerequisite to a the issuance of a zoning permit. See §10.C.5. Site Development Plan Approval for more information.

H. FABRICATION (FAB)

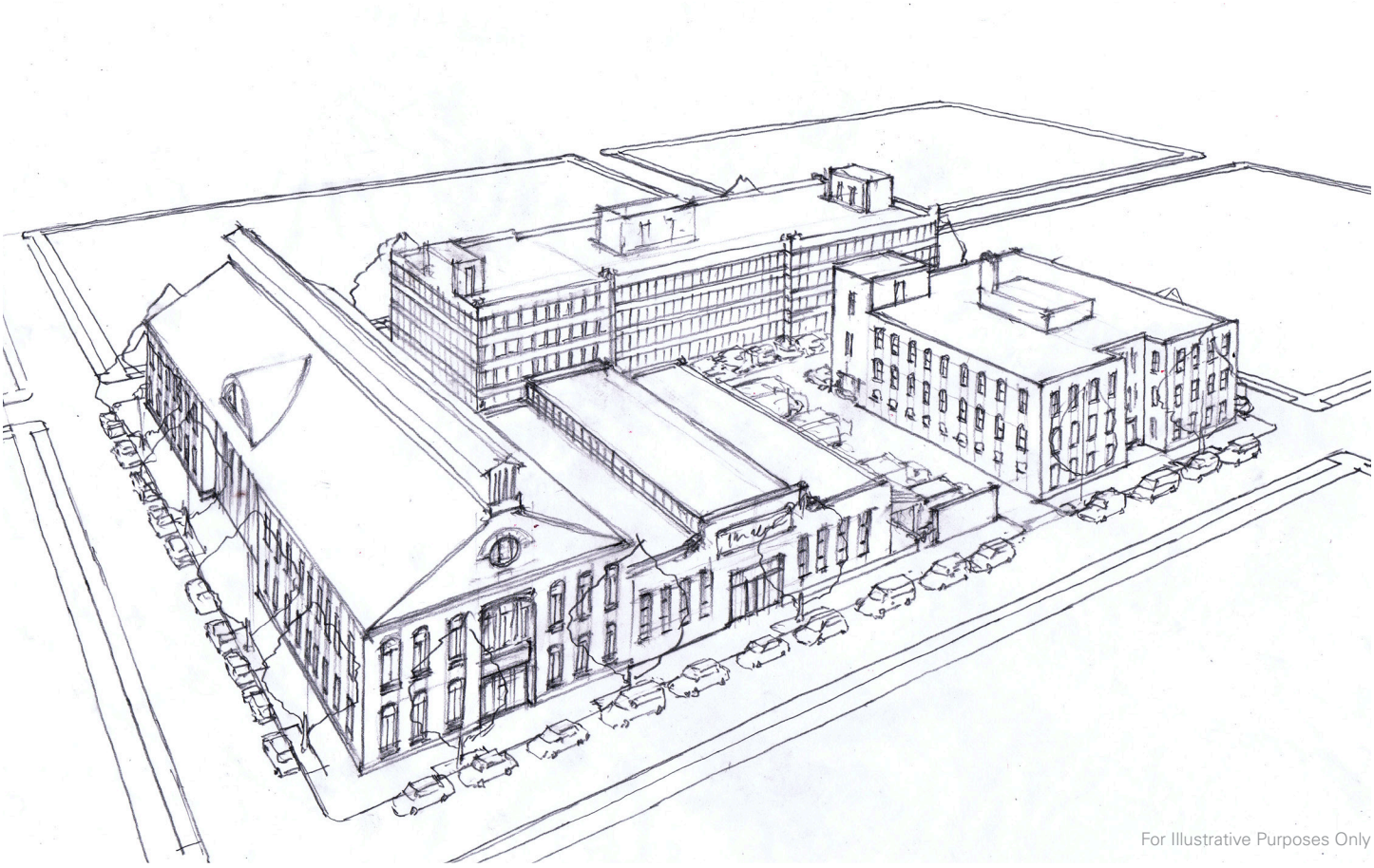

For Illustrative Purposes Only

1. INTENT

a. To accommodate a range of building types and mix of uses that supports the local arts & creative economy.

2. PURPOSE

a. To create a district for both the production and consumption of goods and services from the arts and creative economy.
b. To preserve and enhance existing buildings that support activities common to the arts and creative economy.
c. To limit residential uses in order to protect and preserve existing work space, promote stability in the city's arts and creative economy, and provide employment opportunities in the arts & creative enterprises.
d. To accommodate a variety of civic & institutional, commercial, creative industry, light industrial, craft manufacturing, and office uses.
e. To encourage the development and retention of incubator spaces for start-up, entry-, and mid-level businesses and buildings that include multi-purpose performance and exhibit spaces in support of the arts and creative enterprises.

3. BUILDING STANDARDS

a. Permitted Building Types

i. The following building types are permitted in the Fabrication district:

N	Cottage	N	Shop House
N	House	N	Neighborhood Store
N	Paired House	N	Mixed-Use Building
N	Duplex	**SDP**	Commercial Building
N	Triple Decker	**Y**	Production Building
N	Paired Triple Decker	**Y**	Fabrication Loft
N	Row House		
N	Four-Plex		
N	Six-Plex		
N	Apartment House		
N	Apartment Building		
N	Townhouse Building		

Y	by Right
L	by Right with Limitations
SDP	by Site Development Plan
SP	by Special Permit
N	Not Permitted

ii. See Article 3. Building Standards for the standards for each type.

4. DEVELOPMENT REVIEW

a. Administrative Development Review

i. Building types permitted "by-right" require a only a zoning permit. See §10.C.1. Zoning Permit for more information.

ii. Building types permitted by "site development plan" require site development plan approval as a prerequisite to a the issuance of a zoning permit. See §10.C.5. Site Development Plan Approval for more information.

I. COMMERCIAL INDUSTRY (CI)

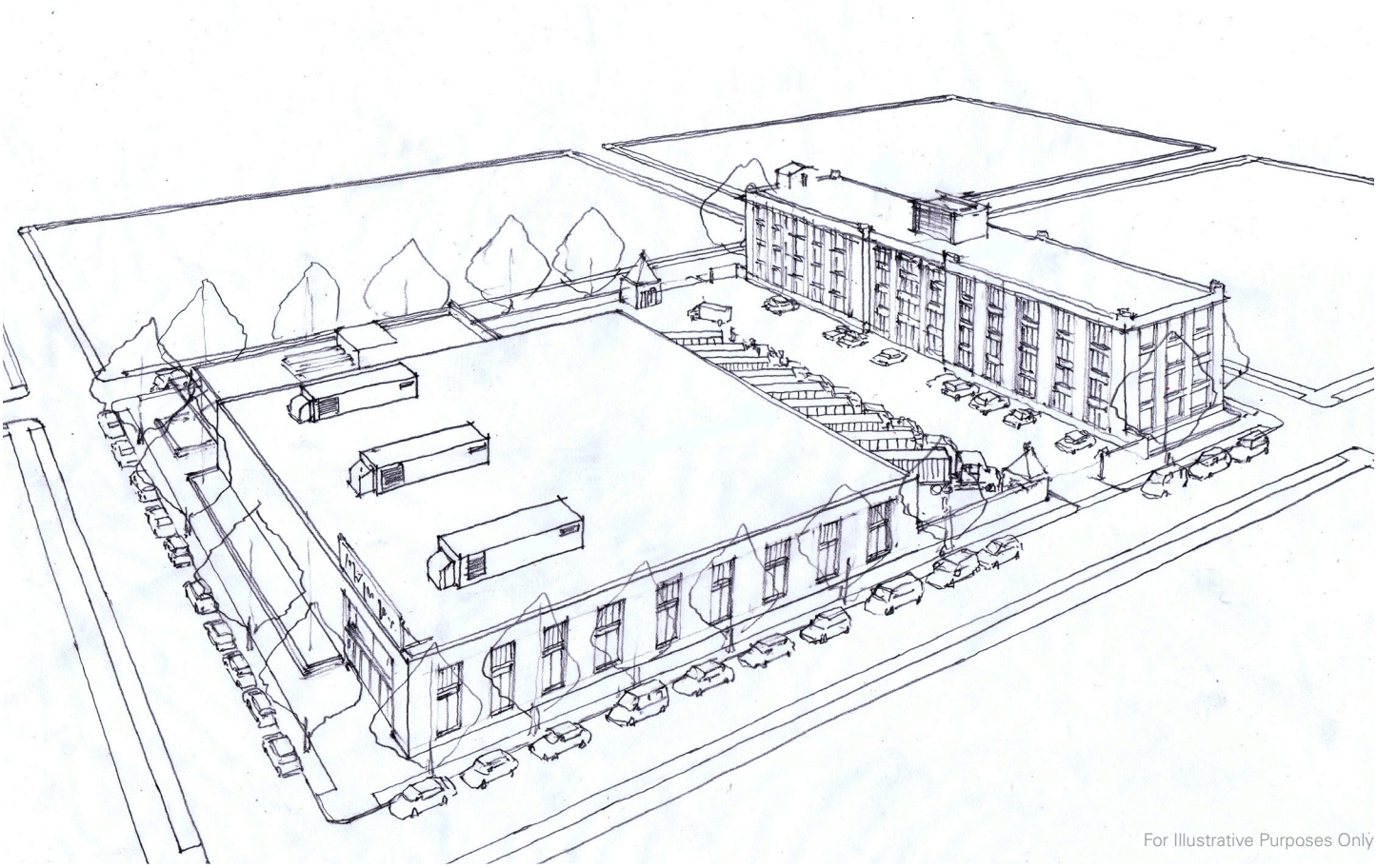

For Illustrative Purposes Only

1. INTENT

a. To accommodate commercial and industrial uses, floor plates, and other activities that do not readily assimilate into other zoning districts.

2. PURPOSE

a. To accommodate light & moderate industrial and large floorplate commercial uses that tend to be less compatible with walkable, mixed-use neighborhoods.

b. To maintain industrial and commercial activities that provide employment opportunities and business-to-businesss commerce.

3. BUILDING STANDARDS

a. Permitted Building Types

i. The following building types are permitted in the Commercial Industry district:

N	Cottage	N	Shop House
N	House	N	Neighborhood Store
N	Paired House	N	Mixed-Use Building
N	Duplex	**Y**	Commercial Building
N	Triple Decker	**Y**	Production Building
N	Paired Triple Decker	**Y**	Fabrication Loft
N	Row House		
N	Four-Plex		
N	Six-Plex		
N	Apartment House		
N	Apartment Building		
N	Townhouse Building		

Y by Right
L by Right with Limitations
SDP by Site Development Plan
SP by Special Permit
N Not Permitted

ii. See Article 3. Building Standards for the standards for each type.

4. DEVELOPMENT REVIEW

a. Administrative Development Review

i. Building types permitted "by-right" require a only a zoning permit. See §10.C.1. Zoning Permit for more information.

J. CIVIC (CIV)

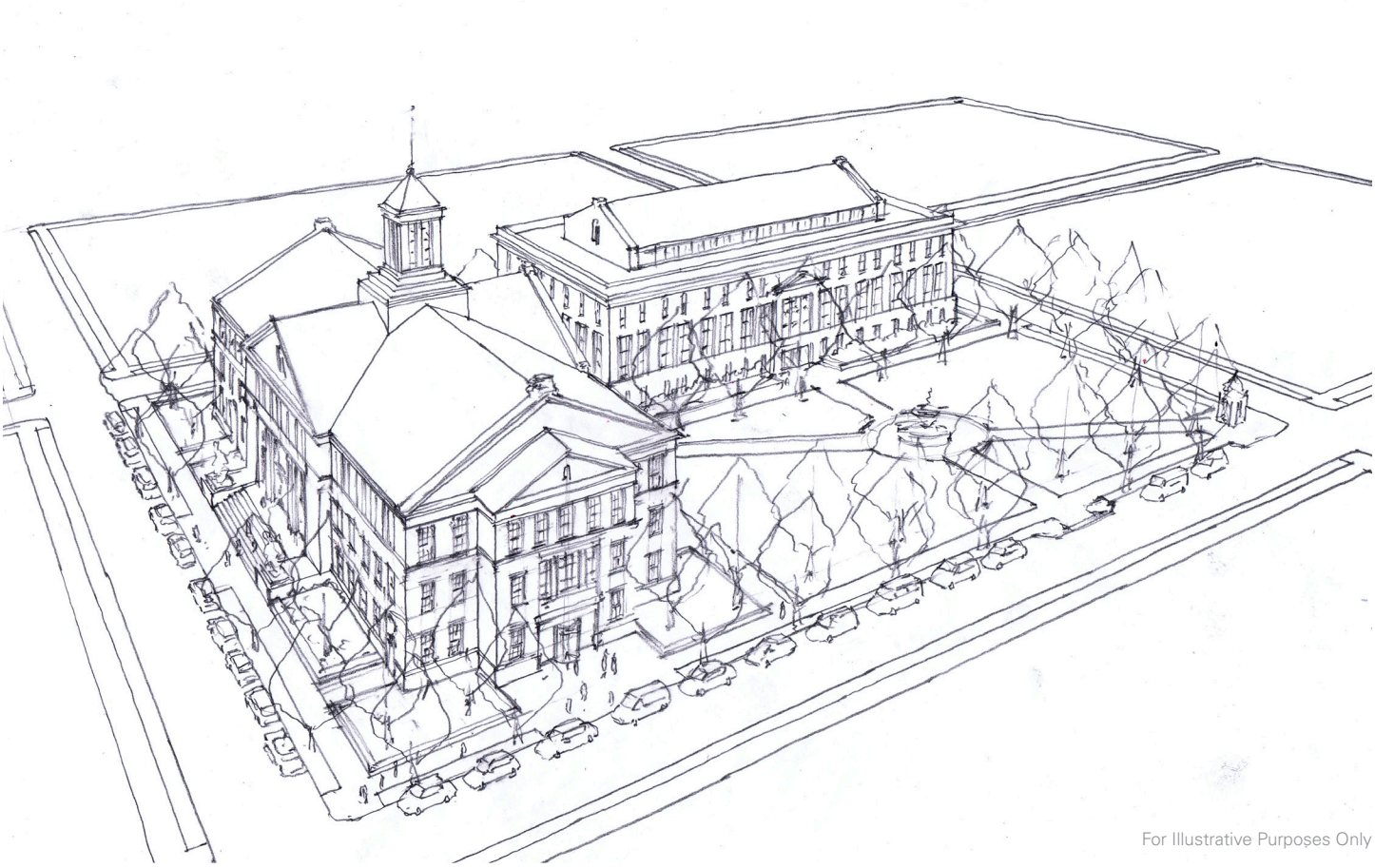

For Illustrative Purposes Only

1. INTENT

a. To preserve existing and create new civic and recreation spaces and accommodate facilities of a public nature such as municipal buildings, libraries, and police & fire stations; governmental uses; and public or private utility services.

2. PURPOSE

a. To protect and preserve existing civic and recreation spaces throughout the city.
b. To communicate the importance and function of civic sites and buildings through architectural cues, landscaping, and attractive signage.
c. To accommodate important utilities that support the community while respecting existing built form and development patterns.

3. BUILDING STANDARDS

a. Permitted Building Types

i. The following building types are permitted in the Civic district:

N	Cottage	N	Shop House
N	House	N	Neighborhood Store
N	Paired House	N	Mixed-Use Building
N	Duplex	N	Commercial Building
N	Triple Decker	N	Production Building
N	Paired Triple Decker	N	Fabrication Loft
N	Row House		
N	Four-Plex		
N	Six-Plex		
N	Apartment House		
N	Apartment Building		
N	Townhouse Building		

P	by Right
L	by Right with Limitations
SDP	by Site Development Plan
SP	by Special Permit
N	Not Permitted

ii. See Article 3. Building Standards for the standards for each type.

ARTICLE 3. BUILDING STANDARDS

BUILDING TYPES OVERVIEW 31
Establishment & Permitting 31
Determination of Building Type 31

STANDARDS FOR ALL BUILDING TYPES 34
Lot Standards 34
Building Placement 34
Height & Massing 35
Uses and Features 37

PRINCIPAL BUILDING TYPES 39
Cottage 39
House 41
Paired House 43
Duplex 45
Triple Decker 47
Paired Triple Decker 49
Four-Plex 51
Six-Plex 53
Apartment House 55
Apartment Building 57
Row Houses 59
Shop House 61
Neighborhood Store 63
Mixed-Use Building 65
Commercial Building 67
Production Building 69
Fabrication Loft 71

BUILDING COMPONENTS 73
General 73
Awning 74
Entry Canopy 74
Bay 75
Balcony 75
Deck 76
Roof Deck 76
Dormer Window 77
Cross Gable 77
Side Wing 78
Rear Addition 78

BUILDING FRONTAGE TYPES 79
General 79
Stoop 80
Portico 80
Porch, Projecting 81
Porch, Engaged 81
Door Yard 82
Forecourt 82
Lobby Entrance 83
Storefront 83
Terrace 84
Lightwell 84

OUTDOOR AMENITY SPACE 85
General 85

BUILDING DESIGN 86
Purpose 86
Building Privacy 86
Energy efficiency 86
Facade Articulation 86
Storefronts 88
Neighborhood Compatibility 88
High-Rise Buildings 88

A. BUILDING TYPES OVERVIEW

1. ESTABLISHMENT & PERMITTING

a. Principal building types are summarized on Table 3.1 and permitted according to Table 3.2.

b. See §3.C.1. Cottage through §3.C.17. Fabrication Loft for the standards for each type.

2. DETERMINATION OF BUILDING TYPE

a. The Building Official shall classify existing principal structures as a specific building type based on the definition of each type and upon finding that the structure is substantially similar in placement, height, massing, use, and features to one of the permitted building types for the zoning district where the structure is located.

b. If the Building Official is unable to classify an existing principal structure as one of the building types of this section, the structure is considered nonconforming and subject to Article 11: Nonconformance.

TABLE 3.1 Buildings Types

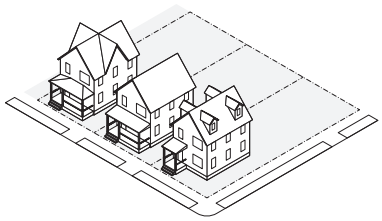

Cottage

A small floor plate, detached, residential building type with one dwelling unit.

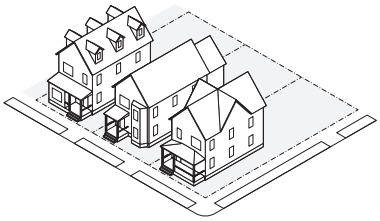

House

A moderate floor plate, detached, residential building type with up to two vertically stacked dwelling units.

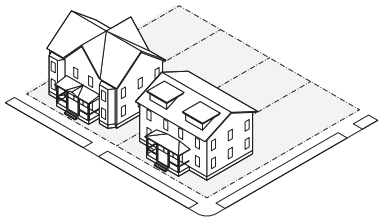

Paired House

A moderate floor plate, semi-detached, residential building type with up to two vertically stacked dwelling units. A paired house is attached on one side to another paired house.

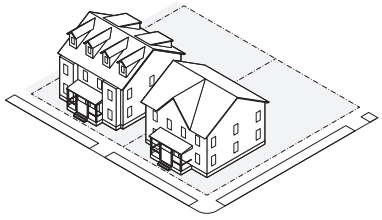

Duplex

A moderate floor plate, detached, residential building type with two side by side dwelling units.

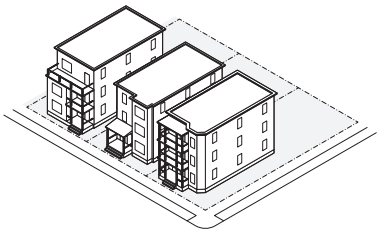

Triple Decker

A moderate floor plate, detached, residential building type with three vertically stacked dwelling units.

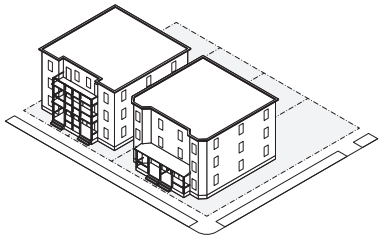

Paired Triple Decker

A moderate floor plate, semi-detached, residential building type with three vertically stacked dwelling units. A paired triple decker is attached on one side to another paired triple decker.

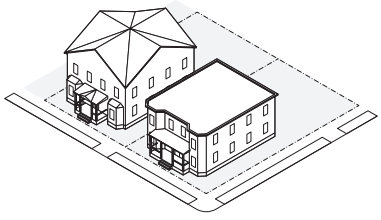

Four-Plex

A moderate floor plate, detached, residential building type with up to four dwelling units.

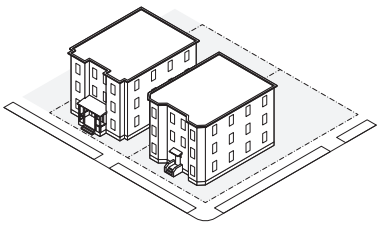

Six-Plex

A moderate floor plate, detached, residential building type with up to six dwelling units.

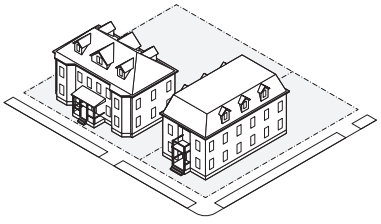

Apartment House

A moderate floor plate, detached, residential building type with six to ten dwelling units designed to appear as a large house.

TABLE 3.1 Buildings Types

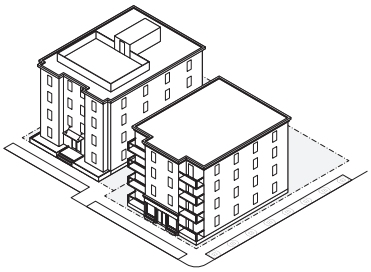

Apartment Building

A large floor plate, multi-story, residential building type with more than six dwelling units.

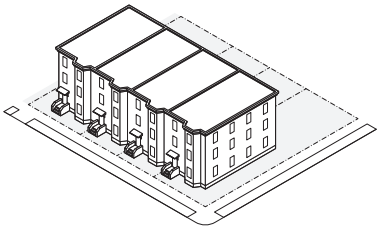

Row Houses

A moderate to large floor plate, residential building type consisting of three (3) to ten (10) side by side dwelling units.

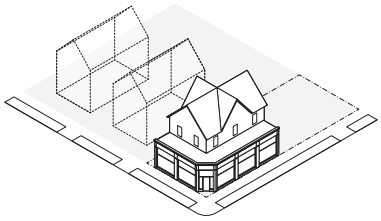

Shop House

A house building type with the ground story converted for commercial use and the residential appearance of upper stories maintained.

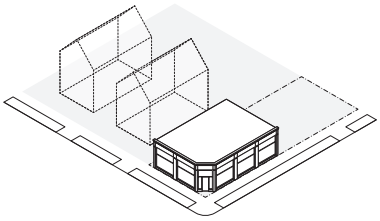

Neighborhood Store

A moderate floor plate, single story building type designed for commercial purposes.

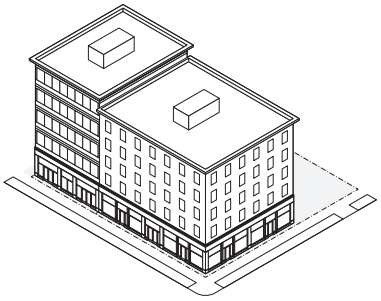

Mixed-Use Building

A multi-story building type with ground floor commercial and upper story residential uses with six or more dwelling units.

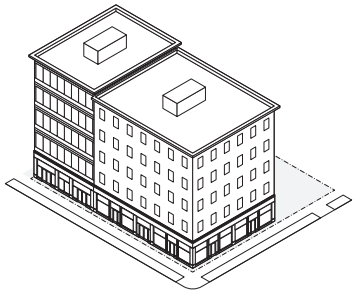

Commercial Building

A multi-story building type limited to commercial uses.

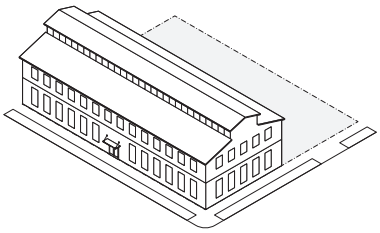

Production Building

A moderate to large floor plate, up to two story building type, often naturally lit with a monitor, clerestory, or sawtooth roof.

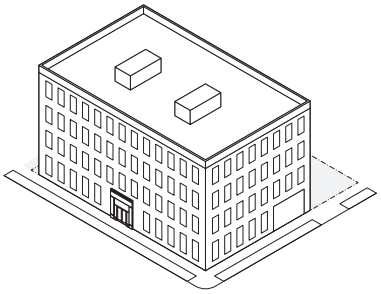

Fabrication Loft

A moderate to large floor plate, multi-story building type subdivided for multiple tenants, often designed with tall ceilings, expansive windows, wide corridors, and service elevators.

TABLE 3.2 Permitted Building Types

Y - by Right
L - by Right with Limitations
SP - by Special Permit
SDP - by Site Development Plan
N - NOT Permitted

	Neighborhood Residence	Urban Residence	3-Story Mixed-Use	4-Story Mixed-Use	5-Story Mixed-Use	7-Story Mixed-Use	10-Story Mixed-Use	Fabrication	Commercial Industry	Civic	Type Specific Standards
Cottage	Y	N	N	N	N	N	N	N	N	N	§3.C.1. Cottage
House	Y	N	N	N	N	N	N	N	N	N	§3.C.2. House
Paired House	Y	N	N	N	N	N	N	N	N	N	§3.C.3. Paired House
Duplex	Y	N	N	N	N	N	N	N	N	N	§3.C.4. Duplex
Triple Decker	SP	N	N	N	N	N	N	N	N	N	§3.C.5. Triple Decker
Paired Triple Decker	SP	N	N	N	N	N	N	N	N	N	§3.C.6. Paired Triple Decker
Four-Plex	N	Y	N	N	N	N	N	N	N	N	§3.C.7. Four-Plex
Six-Plex	N	Y	N	N	N	N	N	N	N	N	§3.C.8. Six-Plex
Apartment House	N	Y	N	N	N	N	N	N	N	N	§3.C.9. Apartment House
Apartment Building	N	SDP	SDP	SDP	SDP	SDP	SDP	N	N	N	§3.C.10. Apartment Building
Row Houses	N	SDP	N	N	N	N	N	N	N	N	§3.C.11. Row Houses
Shop House	L	L	Y	N	N	N	N	N	N	N	§3.C.12. Shop House; Article 2: Base Districts
Neighborhood Store	L	L	N	N	N	N	N	N	N	N	§3.C.13. Neighborhood Store; Article 2: Base Districts
Mixed-Use Building	N	N	SDP	SDP	SDP	SDP	SDP	N	N	N	§3.C.14. Mixed-Use Building
Commercial Building	N	N	SDP	SDP	SDP	SDP	SDP	SDP	SDP	N	§3.C.15. Commercial Building
Production Building	N	N	N	N	N	N	N	Y	Y	N	§3.C.16. Production Building
Fabrication Loft	N	N	N	N	N	N	N	Y	Y	N	§3.C.17. Fabrication Loft

B. STANDARDS FOR ALL BUILDING TYPES

1. LOT STANDARDS

a. Number of Buildings
   i. One (1) principal building type may be built on each lot, except for lots in the Fabrication District.

b. Lot Lines
   i. The front lot line of any INTERIOR LOT or KEY LOT is a primary FRONT LOT LINE.
   ii. For CORNER LOTS, the primary FRONT LOT LINE is designated as follows:
      a). Any front lot line abutting a block face designated on the Pedestrian Streets Map is a primary FRONT LOT LINE. See Article 8. Public Realm Standards for more information on pedestrian streets.
      b). For all other CORNER LOTS, the primary FRONT LOT LINE is designated by the property owner, with all remaining FRONT LOT LINES are designated as secondary FRONT LOT LINES.

c. Lot Dimensions
   i. Lot dimension requirements designate the range of lot sizes that a given building type is allowed to be built on. If a lot is smaller than the minimum required for a certain building type, a different type must be built. If a lot is larger than the maximum specified for a certain building type, the lot should be split to accommodate another building.

2. BUILDING PLACEMENT

a. Setbacks
   i. All buildings and structures must be located at or behind any required minimum front, side, or rear setback except as indicated in §3.B.2.c. Setback Encroachments.
   ii. The facade of a principal building must be built at or in front of any maximum front setback for each story of a building.
   iii. Buildings and structures are not permitted to encroach upon any easement or the right-of-way of any public thoroughfare.

b. Contextual Front Setback
   i. Regardless of the minimum and maximum front setbacks identified for each building type, new construction must have a contextual front setback where the facade is built at any point between the actual front setbacks of the principal buildings on the two immediately abutting lots of the same block face.
   ii. If the subject lot is a corner lot, the facade may be built at any point between the actual front setback of the building on the abutting lot that is oriented toward the same thoroughfare and the maximum front setback indicated for the appropriate building type.
   iii. If the lot on either side of the subject lot is vacant, the minimum and maximum front setback identified for each building type applies.
   iv. The contextual front setback provision shall not be interpreted as requiring a greater front setback than the maximum front setback identified for each building type.
   v. Buildings in the fabrication and commercial industry districts are exempt.

c. Setback Encroachments
   i. Building frontages and components may extend beyond a required front setback as indicated for each type. See §3.D. Building Components and §3.F. Outdoor Amenity Space of this Article for more information.
   ii. Cornices, belt courses, sills, buttresses and other architectural features may encroach up to two (2) feet.
   iii. Chimneys and flues may encroach up to four (4) feet, provided that at least two (2) feet is maintained from the vertical plane of any lot line.
   iv. Building eaves and roof overhangs may encroach up to three (3) feet, provided that at least two (2) feet is maintained from the vertical plane of any lot line.
   v. Unenclosed fire escapes or emergency egress stairways may encroach up to four (4) feet into a required side or rear setback, provided that at least

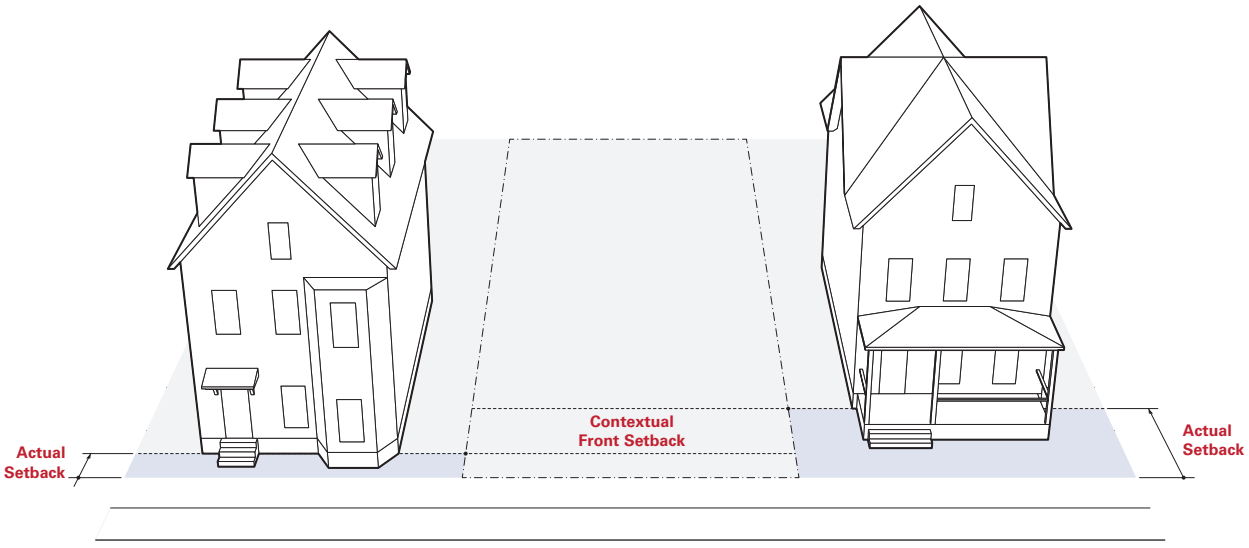

two (2) feet is maintained from the vertical plane of any lot line.

vi. Mechanical equipment associated with residential uses, such as HVAC units and security lighting, may encroach into a required side or rear setback, provided that at least two (2) feet is maintained from the vertical plane of any lot line.

vii. Terraces, uncovered and unenclosed patios, and/or structures below and covered by the ground may fully encroach into a required setback.

viii. Minor structures accessory to utilities, such as hydrants, manholes, transformers, and other cabinet structures, may fully encroach into a required setback.

ix. Accessory structures, fences and walls, signs, and landscape buffers may encroach as indicated in Article 6: Development Standards.

d. Parking Setbacks

i. Unless otherwise specified, all off-street parking, including surface and structured parking, but excluding underground parking, must be located at or behind any required parking setback.

3. HEIGHT & MASSING

a. Facade Orientation

i. The facade of a principal building must be built parallel to a front lot line or to the tangent of a curved front lot line.

b. Facade Build Out

i. The facade of a building must be built to a width that is a percentage of the width of a lot, measured at the maximum primary front setback line.

c. Building Height, Stories

i. To calculate building height by number of stories, each story above the average ground level of the lot is counted as one (1) story, except that a single ground story of twenty-five (25) feet or more is counted as two (2) stories.

ii. Basements are counted as one (1) story when five (5) feet or more of an exterior wall, excluding the rear wall, is exposed above the average grade of the lot.

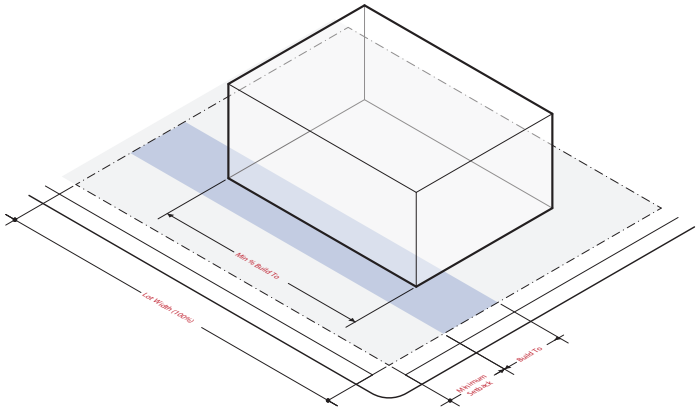

iii. Where a lot slopes downward from the facade by more than five (5) feet toward the rear of a building, the basement is not counted as a story.

iv. When building height allows for a half-story, the half story is counted as the habitable space located directly under a pitched roof. The following standards apply:

a). The roof rafters must intersect the wall plate or top of wall frame of the exterior walls at a height no more than two (2) feet above the finished floor of the half-story.

b). Ceiling height of a half story must not exceed twelve (12) feet in height at any point.

v. Non-habitable attic space located under a pitched roof is not counted as a half story.

d. Building Height, Feet

i. To calculate building height in feet, height is measured as the vertical distance from the average ground level at the base of the building to the following:

a). the top of the roof joists for any building with a flat roof.

b). the top of the ceiling joists of the highest full story permitted for any building with a pitched

GRAPHIC STILL IN PRODUCTION

Building Height in Stories

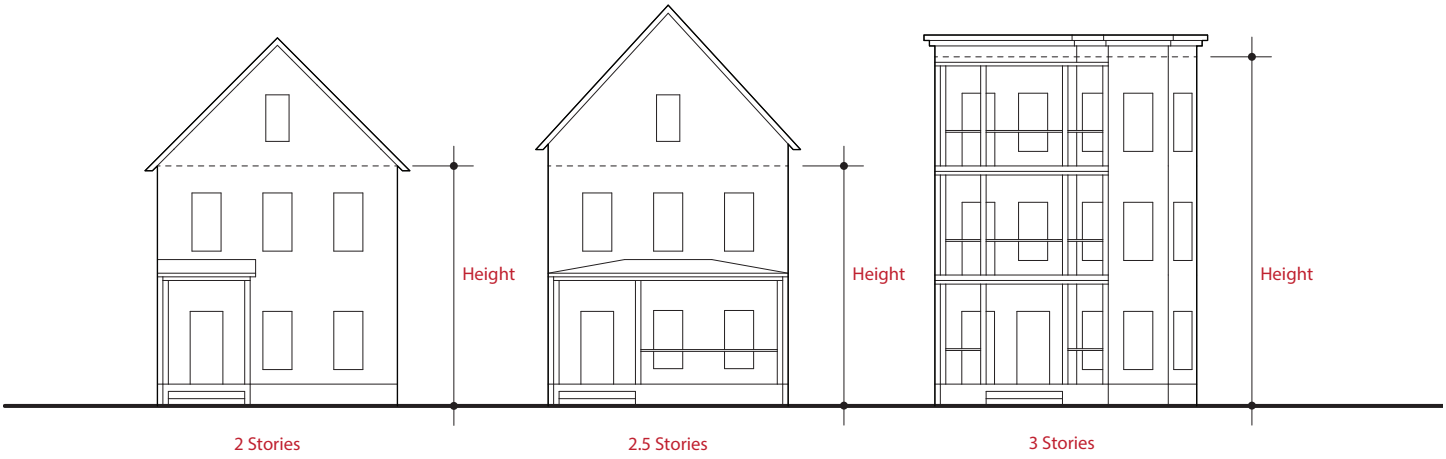

roof.

e. Story Height
   i. Story height is measured from the top of the finished floor to the ceiling above.
   ii. Minimum story height requirements are not measured for half-stories.
   iii. Minimum ground story height applies to the first thirty (30) feet of a building, measured inward from the facade, and at least 50% of the ground story in total.
   iv. At least 80% of each upper story must meet the minimum upper story height provision.

f. Ground Floor Elevation
   i. Ground floor elevation is measured from the average grade of the sidewalk of the abutting thoroughfare or from the crown of the roadway of the adjacent thoroughfare when no sidewalk exists, to the top of the finished floor of the ground story of a building.

g. Roofs
   i. Pitched roofs, if provided, must be symmetrically sloped no less than twenty-two and one half degrees (22.5º; 5:12), except that roofs for porches, porticos, and rear additions may be no less than nine and one-half degrees (9.5º; 2:12).

h. Height Exceptions
   i. Height limits do not apply to roof decks conforming to §3.G.7. Roof Deck, mechanical & stairwell penthouses; roof mounted cellular, radio, and internet transmission equipment; vents or exhausts; solar panels or skylights; flagpoles; belfries, chimneys, cupolas, monuments, parapets, spires, steeples, and other non-habitable architectural features.

i. Height Restrictions
   i. For any lot in the 5MU, 7MU, or 10MU district abutting the side or rear lot line of a lot in the NR district, buildings are not permitted to extend above a forty-five degree (45º) plane angled from a height of thirty-five (35) feet at the side or rear setback.

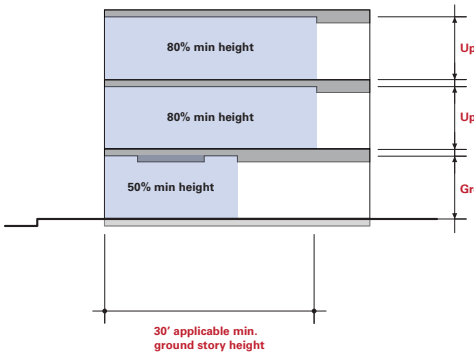

GRAPHIC STILL IN PRODUCTION

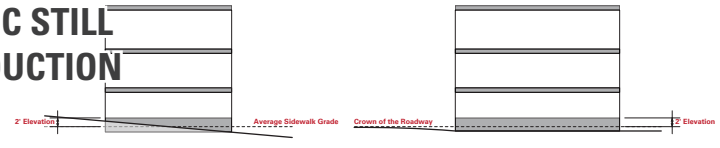

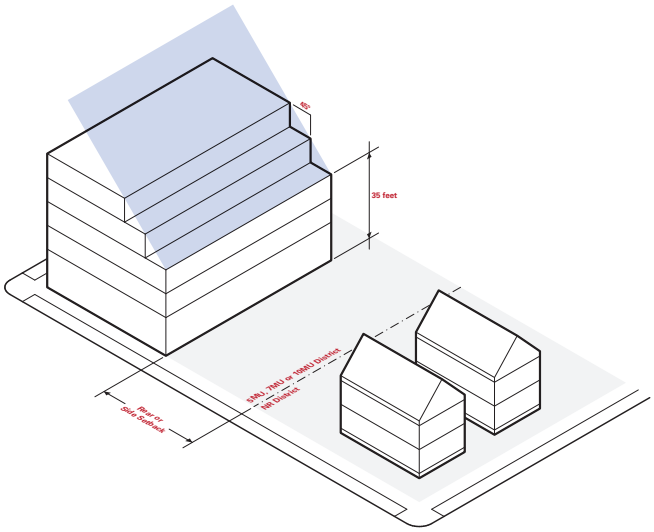

4. USES AND FEATURES

a. Facade Composition
   i. Fenestration
      a). Facades are required to have windows and doors with highly transparent, low reflectivity glass for a percentage of the total area of a facade, measured for each story independently.
      b). Fenestration of a ground story facade is measured between two (2) feet and twelve (12) feet above the abutting sidewalk.
      c). Fenestration of an upper story facade is measured from the top of a finished floor to the top of the finished floor above.
      d). Fenestration requirements are only applicable to facades (ie. exterior walls not facing a front lot line are exempt).
      e). All fenestration (doors and windows) of a facade must be square or vertical in proportion, except as follows:
         i). Within the Neighborhood Residence district, stairwell windows may be circular or take the shape of any regular polygon, other than a triangle.
         ii). Storefront windows are exempt.
      f). Multiple vertically proportioned windows or window lights may be combined to create horizontal compositions.
   ii. Blank Wall Area
      a). Blank wall area is any portion of a facade that does not include fenestration (doors and windows) and surface relief through the use of columns, cornices, moldings, piers, pilasters, sills, sign bands, other equivalent architectural features that either recess or project from the average plane of the facade by at least four (4) inches.
      b). Blank wall area limitations apply both vertically and horizontally for all stories of a building for any facade.

b. Pedestrian Access
   i. Principal entrances must located on the facade of a building, provide both ingress and egress, and be operable at all times.
   ii. Principal entrance spacing is measured as the distance between center line of doors along a facade.
   iii. Principal entrance spacing requirements must be met for each building individually, but are not applicable to adjacent buildings.

c. Use & Occupancy
   i. Habitable Space Depth
      a). Ground story dwelling units must have a habitable room at least twenty feet in depth, measured as the distance from the facade towards the interior of the building.
   ii. Tenant Space Depth
      a). Ground story tenant spaces must have leasable area with a depth indicated for each building type for at least seventy percent (70%) of the floor area, measured as the distance from the facade towards the interior of a building.

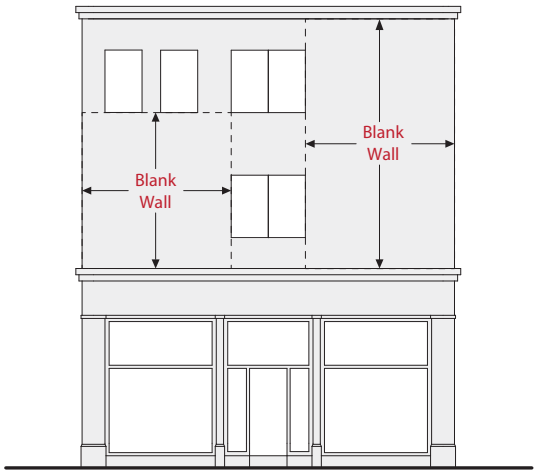

iii. Use Categories
  a). Certain building types include limitations and/or restrictions on the uses permitted on different stories of the building. See the "Use & Occupancy" provisions for each building type for more information.
iv. Residential Density
  a). The residential density of each building is regulated as:
    i). the maximum number of permitted dwelling units; or
    ii). the average dwelling unit size permitted across all of the dwelling units in a building.
  b). Average dwelling unit size is calculated as the total gross floor area of a building divided by the total number of dwelling units.
  c). No existing residential use may be converted to conflict with this standard.
  d). The average dwelling unit size requirement may be adjusted according to §9.C. Density Bonuses
v. Exemptions
  a). The average dwelling unit size requirement does not apply to the following:
    i). Uses within the Group Living use category.
    ii). Housing designed for Senior Citizens or the Disabled.
vi. Minimum Dwelling Unit Size
  a). Dwelling units must have a minimum useable floor area as specified on Table 3.3 for all buildings providing more than one (1) dwelling unit.
  b). The useable floor area of a half story is calculated as seventy-five percent (75%) of the total floor area of the half-story.
vii. Dwelling Unit Orientation
  a). Dwelling units may be stacked one above the other or attached side by side as indicated for each building type.
  b). Dwelling units attached back-to-side are prohibited except for buildings on corner lots.
  c). Dwelling units attached front-to back are prohibited.

TABLE 3.3 Minimum Dwelling Unit Size

	Useable Floor Area (min)
Studio	400 sq. ft.
1 Bedroom	600 sq. ft.
2+ Bedrooms	900 sq. ft.

C. PRINCIPAL BUILDING TYPES

1. COTTAGE

A small floor plate, detached, residential building type with one dwelling unit.

a. Lot Standards

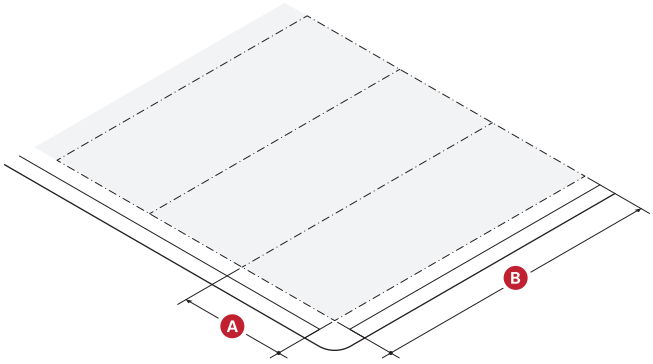

LOT DIMENSIONS	
A Width (min)	32 feet
B Depth (min)	70 feet

LOT COVERAGE	
Permeable Surface (min)	35%
Landscape (min)	25%

b. Placement

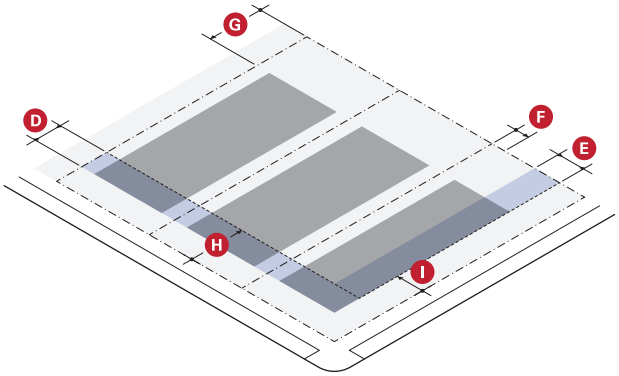

BUILDING SETBACKS		
Contextual Front Setback (see §.3.B.2.b)	Required	
D Primary Front Setback (min/max)	10 feet	20 feet
E Secondary Front Setback (min/max)	10 feet	20 feet
F Side Setback (min)	5 feet	
G Rear Setback (min)	20 feet	

PARKING SETBACKS	
H Primary Front Setback (min)	20 feet
I Secondary Front Setback (min)	10 feet

COTTAGE (cont.)

A small floor plate, detached, residential building type with one dwelling unit.

c. Height & Massing

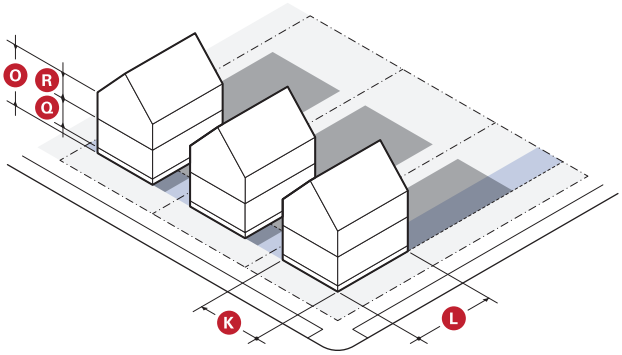

MAIN BODY		
J Facade Build Out (min)	60%	
K Width (min/max)	22 feet	26 feet
L Depth (min/max)	24 feet	32 feet
N Building Height (max)	2 stories (28 ft.)	
P Story Height (min/max)	9 feet	12 feet
First Floor Elevation (min)	2 feet	

PERMITTED BUILDING COMPONENTS	
Awning	See §3.D.2
Entry Canopy	See §3.D.3
Bay	See §3.D.4
Balcony	See §3.D.5
Deck	See §3.D.6
Dormer Window	See §3.D.8
Cross Gable	See §3.D.9
Side Wing	See §3.D.10
Rear Addition	See §3.D.11

d. Uses & Features

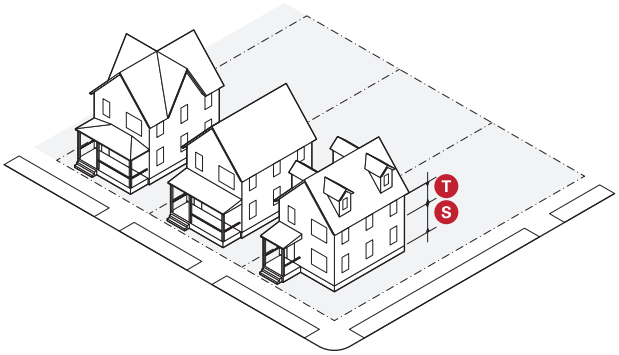

FACADE COMPOSITION		
S Ground Story Fenestration (min/max)	20%	50%
T Upper Story Fenestration (min/max)	20%	50%

PERMITTED BUILDING FRONTAGE	(1 required)
Stoop	See §3.E.2
Portico	See §3.E.3
Porch, Projecting	See §3.E.4
Porch, Engaged	See §3.E.5

USE & OCCUPANCY	
Use Category	Residential
Dwelling Units (max)	1
Outdoor Amenity Space (min)	1/ Dwelling Unit

2. HOUSE

A moderate floor plate, detached, residential building type with up to two vertically stacked dwelling units.

a. Lot Standards

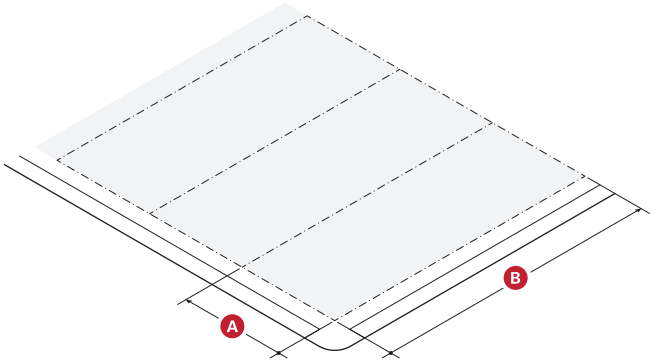

LOT DIMENSIONS	
A Width (min)	32 feet
B Depth (min)	80 feet

LOT COVERAGE	
Permeable Surface (min)	35%
Landscape (min)	25%

b. Placement

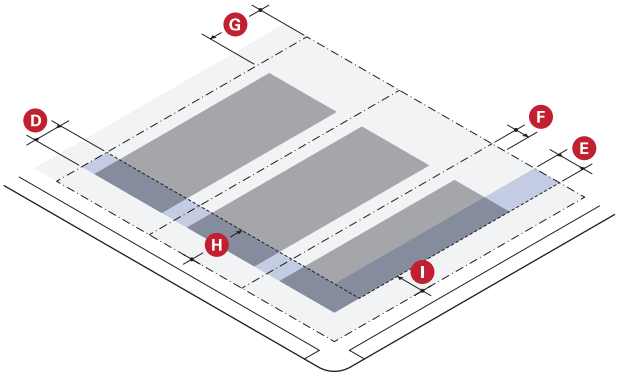

BUILDING SETBACKS		
Contextual Front Setback (see §.3.B.2.b)	Required	
D Primary Front Setback (min/max)	10 feet	20 feet
E Secondary Front Setback (min/max)	10 feet	20 feet
F Side Setback (min)	5 feet	
G Rear Setback (min)	20 feet	

PARKING SETBACKS	
H Primary Front Setback (min)	20 feet
I Secondary Front Setback (min)	10 feet

HOUSE (cont.)

A moderate floor plate, detached, residential building type with up to two vertically stacked dwelling units.

c. Height & Massing

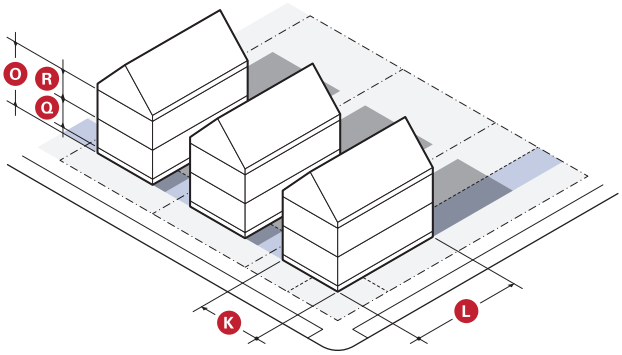

MAIN BODY		
J Facade Build Out (min)	50%	
K Width (min/max)	22' min.	28' max.
L Depth (min/max)	28' min.	48' max.
N Building Height (max)	2.5 stories (28 ft.)	
P Story Height (min/max)	9 ft.	12 ft.
First Floor Elevation (min)	2 ft.	

PERMITTED BUILDING COMPONENTS	
Awning	See §3.D.2
Entry Canopy	See §3.D.3
Bay	See §3.D.4
Balcony	See §3.D.5
Deck	See §3.D.6
Dormer Window	See §3.D.8
Cross Gable	See §3.D.9
Side Wing	See §3.D.10
Rear Addition	See §3.D.11

d. Uses & Features

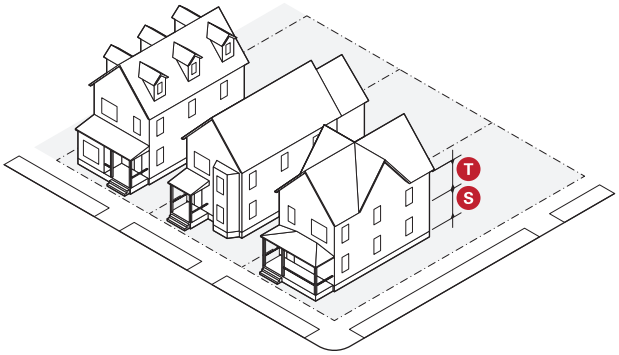

FACADE COMPOSITION		
S Ground Story Fenestration (min/max)	20% min.	50% max.
T Upper Story Fenestration (min/max)	20% min.	50% max.

PERMITTED BUILDING FRONTAGE	(1 required)
Stoop	See §3.E.2
Portico	See §3.E.3
Porch, Projecting	See §3.E.4
Porch, Engaged	See §3.E.5

USE & OCCUPANCY	
Use Category	Residential
Dwelling Units (max)	2
Outdoor Amenity Space (min)	1/ Dwelling Unit

3. PAIRED HOUSE

A moderate floor plate, semi-detached, residential building type with up to two vertically stacked dwelling units. A paired house is attached on one side to another paired house.

a. Lot Standards

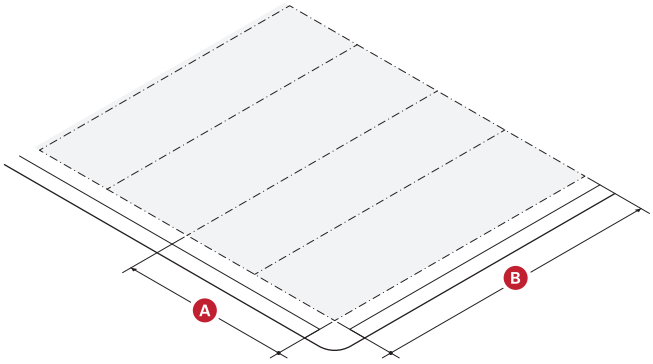

LOT DIMENSIONS	
A Width (min)	27 ft.
B Depth (min)	80 ft.

LOT COVERAGE	
Permeable Surface (min)	35%
Landscape (min)	25%

b. Placement

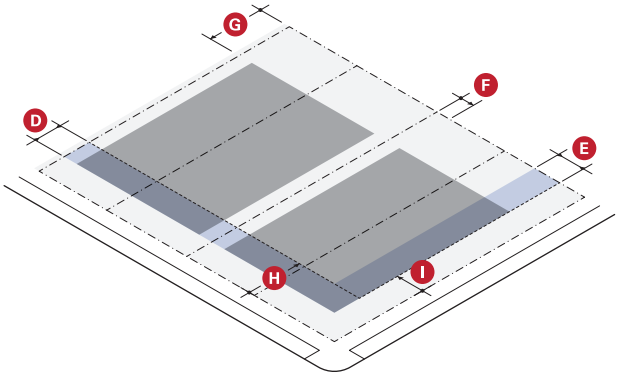

BUILDING SETBACKS		
Contextual Front Setback (see §.3.B.2.b)	Required	
D Primary Front Setback	10' min.	20' max.
E Secondary Front Setback	10' min.	20' max.
F Side Setback (min)	--	
Party Lot Line	0 ft.	
Side Lot Line	5 ft.	
G Rear Setback (min)	20 ft.	

PARKING SETBACKS	
H Primary Front Setback (min)	20 ft.
I Secondary Front Setback (min)	10 feet

PAIRED House (cont.)

A moderate floor plate, semi-detached, residential building type with up to two vertically stacked dwelling units. A paired house is attached on one side to another paired house.

c. Height & Massing

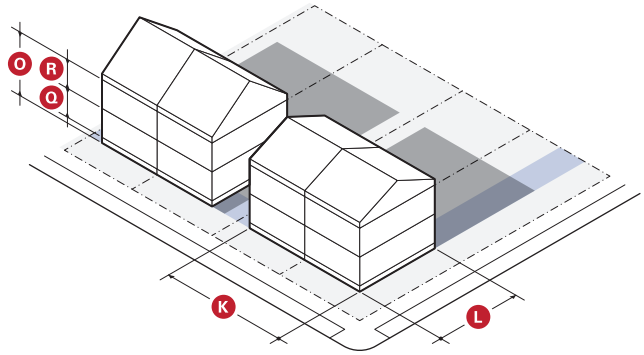

d. Uses & Features

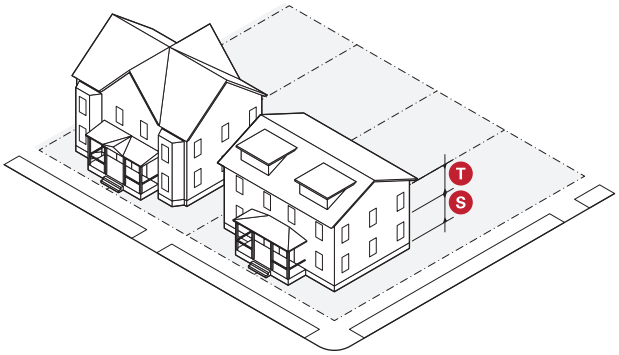

MAIN BODY		
J Facade Build Out (min)	50%	
K Width (min/max)	22' min.	28' max.
L Depth (min/max)	28' min.	48' max.
N Building Height (max)	2.5 stories (28 ft.)	
P Story Height (min/max)	9 ft.	12 ft.
First Floor Elevation (min)	2 ft.	

PERMITTED BUILDING COMPONENTS	
Awning	See §3.D.2
Entry Canopy	See §3.D.3
Bay	See §3.D.4
Balcony	See §3.D.5
Deck	See §3.D.6
Dormer Window	See §3.D.8
Cross Gable	See §3.D.9
Side Wing	See §3.D.10
Rear Addition	See §3.D.11

FACADE COMPOSITION		
S Ground Story Fenestration (min/max)	20% min.	50% max.
T Upper Story Fenestration (min/max)	20% min.	50% max.

PERMITTED BUILDING FRONTAGE	(1 required)
Stoop	See §3.E.2
Portico	See §3.E.3
Porch, Projecting	See §3.E.4
Porch, Engaged	See §3.E.5

USE & OCCUPANCY	
Use Category	Residential
Dwelling Units (max)	2
Outdoor Amenity Space (min)	1/ Dwelling Unit

4. DUPLEX

A moderate floor plate, detached, residential building type with two side by side dwelling units.

a. Lot Standards

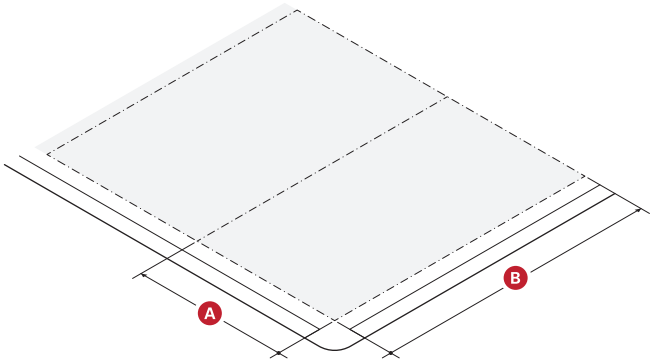

LOT DIMENSIONS	
A Width (min)	50 ft.
B Depth (min)	70 ft.

LOT COVERAGE	
Permeable Surface (min)	35%
Landscape (min)	25%

b. Placement

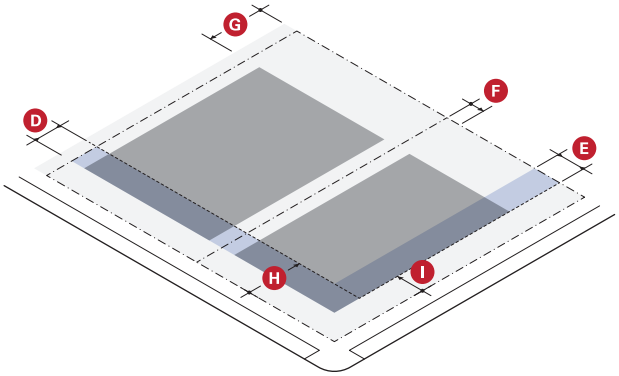

BUILDING SETBACKS		
Contextual Front Setback (see §.3.B.2.b)	Required	
D Primary Front Setback	10' min.	20' max.
E Secondary Front Setback	10' min.	20' max.
F Side Setback (min)	5 ft.	
G Rear Setback (min)	20 ft.	

PARKING SETBACKS	
H Primary Front Setback (min)	20 ft.
I Secondary Front Setback (min)	10 feet

DUPLEX (cont.)

A moderate floor plate, detached, residential building type with two side by side dwelling units.

c. Height & Massing

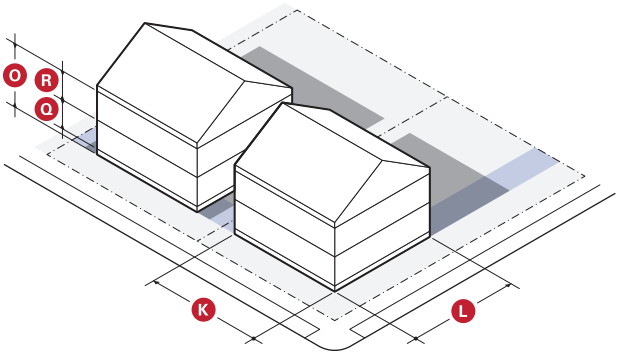

MAIN BODY		
J Facade Build Out (min)	50%	
K Width (min/max)	40' min.	56' max.
L Depth (min/max)	30' min.	52' max.
N Building Height (max)	2.5 stories (28 ft.)	
P Story Height (min/max)	9 ft.	12 ft.
First Floor Elevation (min)	2 ft.	

PERMITTED BUILDING COMPONENTS	
Awning	See §3.D.2
Entry Canopy	See §3.D.3
Bay	See §3.D.4
Balcony	See §3.D.5
Deck	See §3.D.6
Dormer Window	See §3.D.8
Cross Gable	See §3.D.9
Side Wing	See §3.D.10
Rear Addition	See §3.D.11

d. Uses & Features

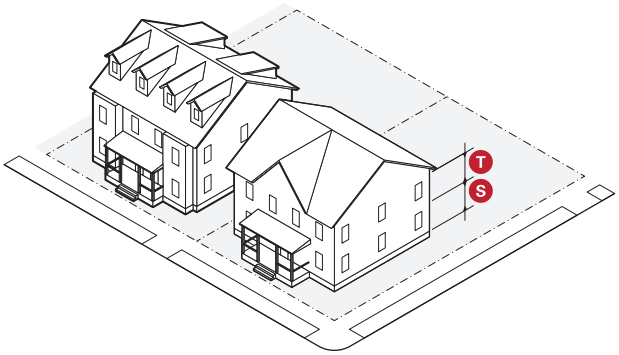

FACADE COMPOSITION		
S Ground Story Fenestration (min/max)	20% min.	50% max.
T Upper Story Fenestration (min/max)	20% min.	50% max.

PERMITTED BUILDING FRONTAGE	(1 required)
Stoop	See §3.E.2
Portico	See §3.E.3
Porch, Projecting	See §3.E.4
Porch, Engaged	See §3.E.5

USE & OCCUPANCY	
Use Category	Residential
Dwelling Units (max)	2
Outdoor Amenity Space (min)	1/ Dwelling Unit

5. TRIPLE DECKER

A moderate floor plate, detached, residential building type with three vertically stacked dwelling units.

a. Lot Standards

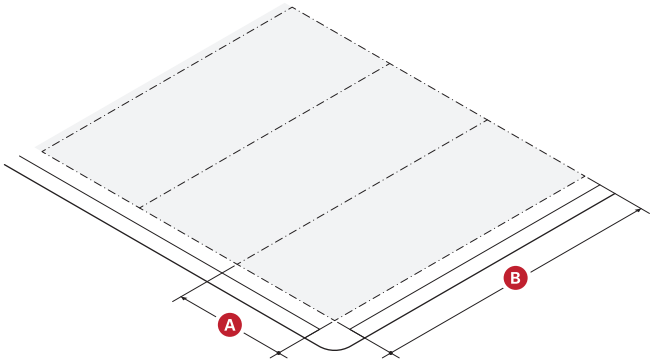

LOT DIMENSIONS	
A Width (min)	34 ft.
B Depth (min)	80 ft.

LOT COVERAGE	
Permeable Surface (min)	35%
Landscape (min)	25%

b. Placement

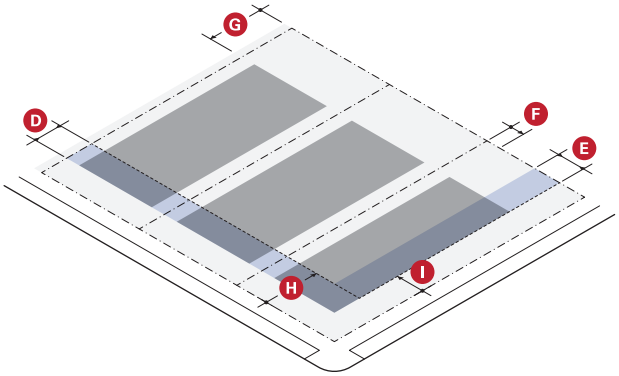

BUILDING SETBACKS		
Contextual Front Setback (see §.3.B.2.b)	Required	
D Primary Front Setback	10' min.	20' max.
E Secondary Front Setback	10' min.	20' max.
F Side Setback (min)	5 ft.	
G Rear Setback (min)	20 ft.	

PARKING SETBACKS	
H Primary Front Setback (min)	20 ft.
I Secondary Front Setback (min)	10 feet

TRIPLE Decker (cont.)

A moderate floor plate, detached, residential building type with three vertically stacked dwelling units.

c. Height & Massing

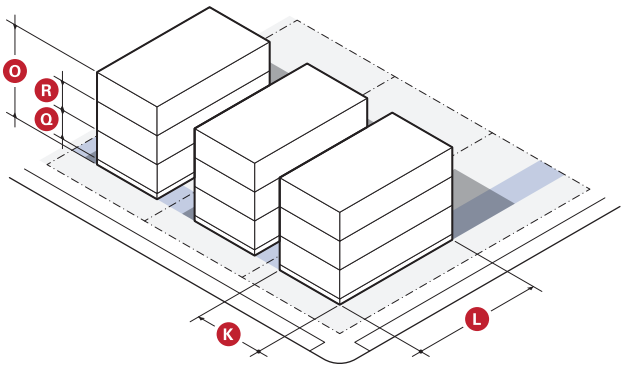

MAIN BODY		
J Facade Build Out (min)	60%	
K Width (min/max)	24' min.	30' max.
L Depth (min/max)	36' min.	50' max.
N Building Height (max)	3 stories (40 ft.)	
P Story Height (min/max)	9 ft.	12 ft.
First Floor Elevation (min)	2 ft.	

PERMITTED BUILDING COMPONENTS	
Awning	See §3.D.2
Entry Canopy	See §3.D.3
Bay	See §3.D.4
Balcony	See §3.D.5

d. Uses & Features

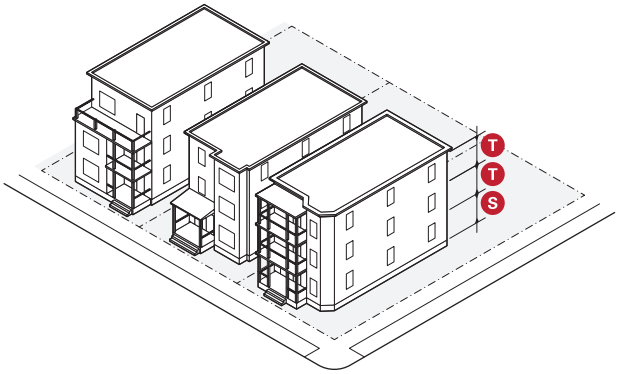

FACADE COMPOSITION		
S Ground Story Fenestration (min/max)	20% min.	50% max.
T Upper Story Fenestration (min/max)	20% min.	50% max.

PERMITTED BUILDING FRONTAGE	(1 required)
Stoop	See §3.E.2
Portico	See §3.E.3
Porch, Projecting	See §3.E.4

USE & OCCUPANCY	
Use Category	Residential
Dwelling Units (max)	3
Outdoor Amenity Space (min)	1/ Dwelling Unit

6. PAIRED TRIPLE DECKER

A moderate floor plate, semi-detached, residential building type with three vertically stacked dwelling units. A paired triple decker is attached on one side to another paired triple decker.

a. Lot Standards

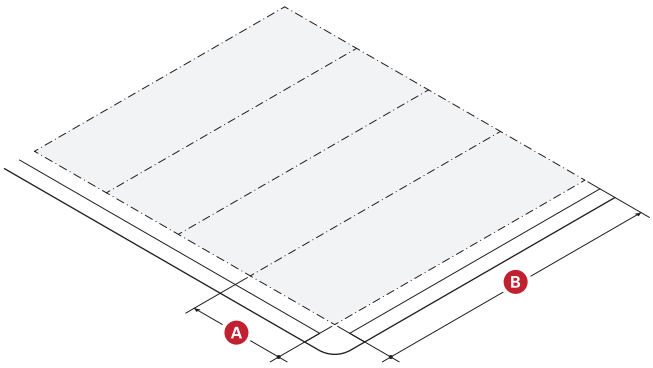

LOT DIMENSIONS	
A Width (min)	29 feet
B Depth (min)	80 feet

LOT COVERAGE	
Permeable Surface (min)	35%
Landscape (min)	25%

b. Placement

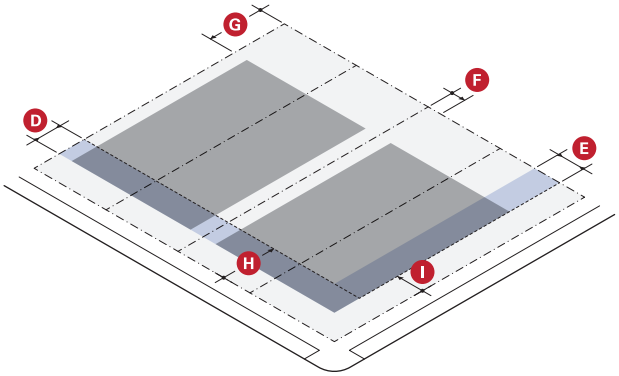

BUILDING SETBACKS		
Contextual Front Setback (see §.3.B.2.b)	Required	
D Primary Front Setback	10' min.	20' max.
E Secondary Front Setback	10' min.	20' max.
F Side Setback (min)	--	
Party Lot Line	0 ft.	
Side Lot Line	5 ft.	
G Rear Setback (min)	20 ft.	

PARKING SETBACKS	
H Primary Front Setback (min)	20 ft.
I Secondary Front Setback (min)	10 feet

PAIRED Triple Decker (cont.)

A moderate floor plate, semi-detached, residential building type with three vertically stacked dwelling units. A paired triple decker is attached on one side to another paired triple decker.

c. Height & Massing

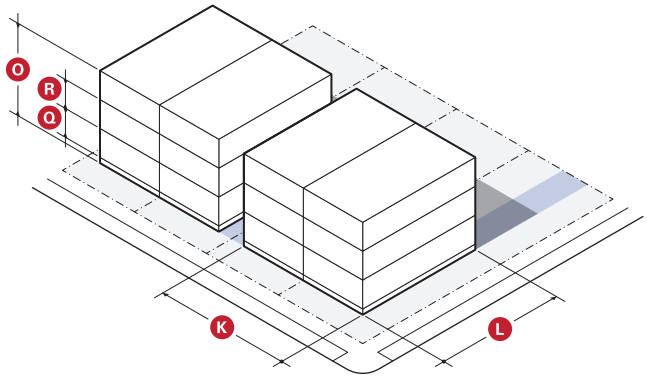

d. Uses & Features

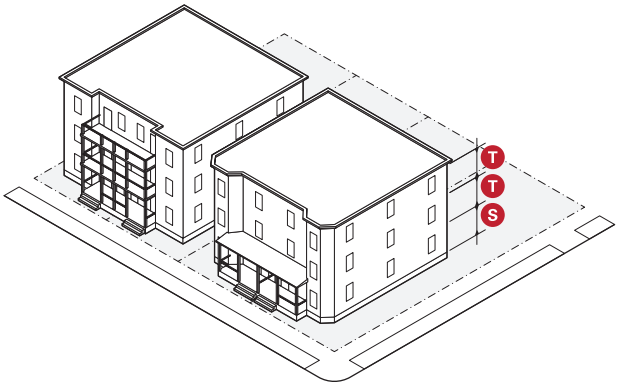

MAIN BODY		
J Facade Build Out (min)	60%	
K Width (min/max)	24' min.	30' max.
L Depth (min/max)	36' min.	50' max.
N Building Height (max)	3 stories (40 ft.)	
P Story Height (min/max)	9 ft.	12 ft.
First Floor Elevation (min)	2 ft.	

PERMITTED BUILDING COMPONENTS	
Awning	See §3.D.2
Entry Canopy	See §3.D.3
Bay	See §3.D.4
Balcony	See §3.D.5

FACADE COMPOSITION		
S Ground Story Fenestration (min/max)	20% min.	50% max.
T Upper Story Fenestration (min/max)	20% min.	50% max.

PERMITTED BUILDING FRONTAGE	(1 required)
Stoop	See §3.E.2
Portico	See §3.E.3
Porch, Projecting	See §3.E.4

USE & OCCUPANCY	
Use Category	Residential
Dwelling Units (max)	3
Outdoor Amenity Space (min)	1/ Dwelling Unit

7. FOUR-PLEX

A moderate floor plate, detached, residential building type with up to four dwelling units.

a. Lot Standards

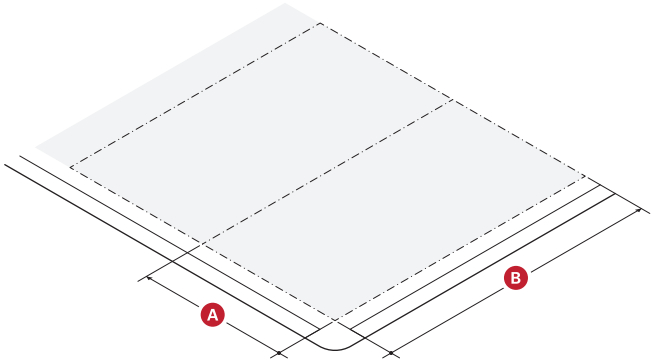

LOT DIMENSIONS	
A Width (min)	48 ft.
B Depth (min)	85 ft.

LOT COVERAGE	
Permeable Surface (min)	35%
Landscape (min)	25%

b. Placement

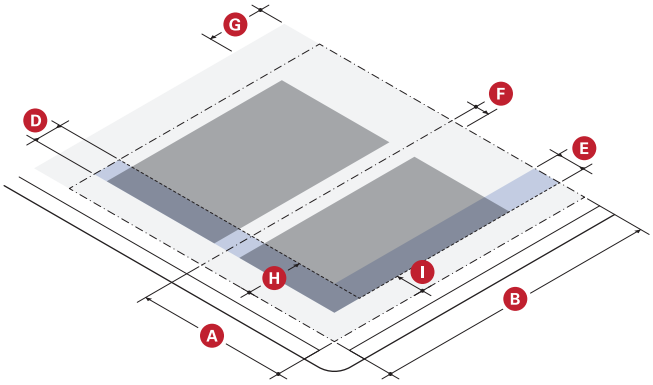

BUILDING SETBACKS		
Contextual Front Setback (see §.3.B.2.b)	Required	
D Primary Front Setback	10' min.	20' max.
E Secondary Front Setback	10' min.	20' max.
F Side Setback (min)	5 ft.	
G Rear Setback (min)	20 ft.	

PARKING SETBACKS	
H Primary Front Setback (min)	20 ft.
I Secondary Front Setback (min)	10 feet

FOUR-PLEX (cont.)

A moderate floor plate, detached, residential building type with up to four dwelling units.

c. Height & Massing

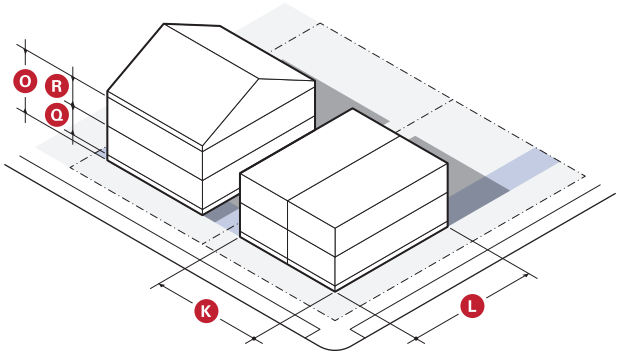

MAIN BODY		
J Facade Build Out (min)	70%	
K Width (min/max)	38' min.	48' max.
L Depth (min/max)	34' min.	54' max.
N Building Height (max)	2.5 stories (28 ft.)	
P Story Height (min/max)	9 ft.	12 ft.
First Floor Elevation (min)	2 ft.	

PERMITTED BUILDING COMPONENTS	
Awning	See §3.D.2
Entry Canopy	See §3.D.3
Bay	See §3.D.4
Balcony	See §3.D.5
Deck	See §3.D.6
Dormer Window	See §3.D.8
Cross Gable	See §3.D.9

d. Uses & Features

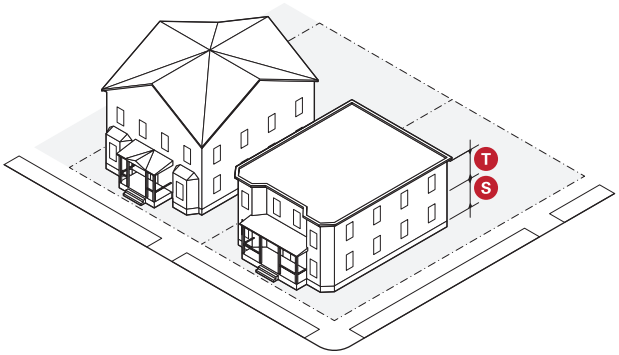

FACADE COMPOSITION		
S Ground Story Fenestration (min/max)	20% min.	50% max.
T Upper Story Fenestration (min/max)	20% min.	50% max.

PERMITTED BUILDING FRONTAGE	(1 required)
Stoop	See §3.E.2
Portico	See §3.E.3
Porch, Projecting	See §3.E.4

USE & OCCUPANCY	
Use Category	Residential
Dwelling Units (max)	4
Outdoor Amenity Space (min)	1/ Dwelling Unit

8. SIX-PLEX

A moderate floor plate, detached, residential building type with up to six dwelling units.

a. Lot Standards

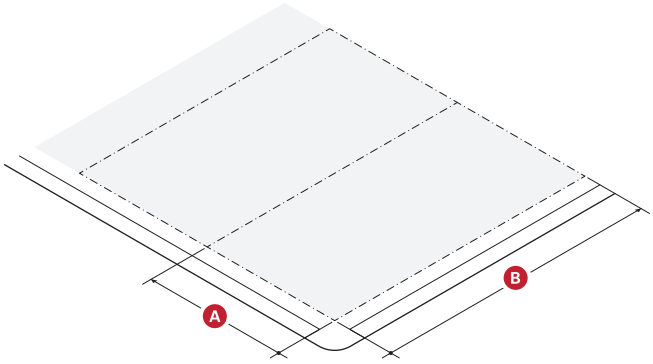

LOT DIMENSIONS	
A Width (min)	46 ft.
B Depth (min)	85 ft.

LOT COVERAGE	
Permeable Surface (min)	35%
Landscape (min)	25%

b. Placement

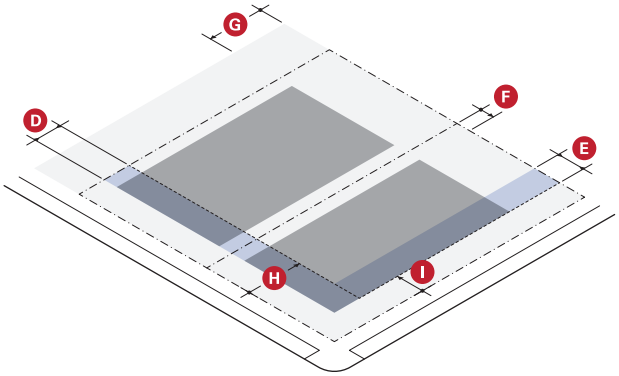

BUILDING SETBACKS		
Contextual Front Setback (see §.3.B.2.b)	Required	
D Primary Front Setback	10' min.	20' max.
E Secondary Front Setback	10' min.	20' max.
F Side Setback (min)	5 ft.	
G Rear Setback (min)	20 ft.	

PARKING SETBACKS	
H Primary Front Setback (min)	20 ft.
I Secondary Front Setback (min)	10 feet

SIX-PLEX (cont.)

A moderate floor plate, detached, residential building type with up to six dwelling units.

c. Height & Massing

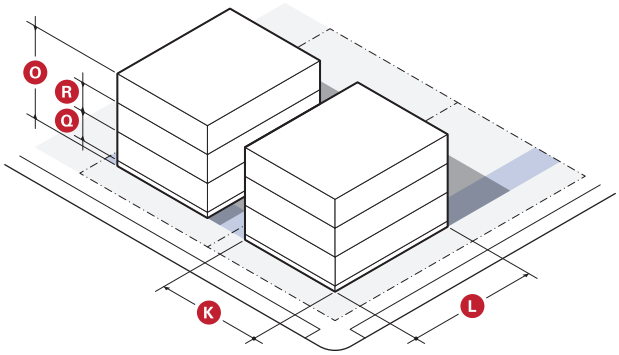

MAIN BODY		
J Facade Build Out (min)	70%	
K Width (min/max)	36' min.	50' max.
L Depth (min/max)	44' min.	64' max.
N Building Height (max)	3 stories (40 ft.)	
P Story Height (min/max)	9 ft.	12 ft.
First Floor Elevation (min)	2 ft.	

PERMITTED BUILDING COMPONENTS	
Awning	See §3.D.2
Entry Canopy	See §3.D.3
Bay	See §3.D.4
Balcony	See §3.D.5
Deck	See §3.D.6
Dormer Window	See §3.D.8
Cross Gable	See §3.D.9

d. Uses & Features

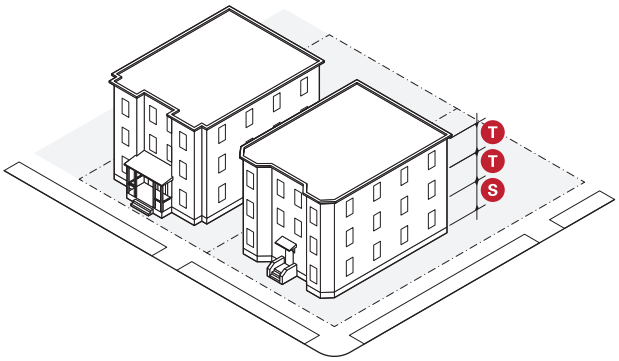

FACADE COMPOSITION		
S Ground Story Fenestration (min/max)	20% min.	50% max.
T Upper Story Fenestration (min/max)	20% min.	50% max.

PERMITTED BUILDING FRONTAGE	(1 required)
Stoop	See §3.E.2
Portico	See §3.E.3
Porch, Projecting	See §3.E.4

USE & OCCUPANCY	
Use Category	Residential
Dwelling Units (max)	6
Outdoor Amenity Space (min)	1/ Dwelling Unit

9. APARTMENT HOUSE

A moderate floor plate, detached, residential building type with six to ten dwelling units designed to appear as a large house.

a. Lot Standards

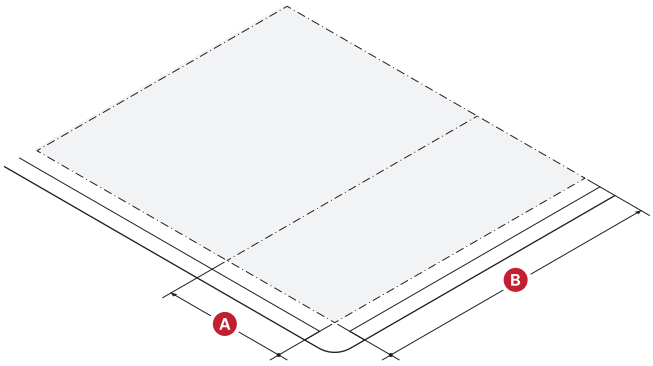

LOT DIMENSIONS	
A Width (min)	38 ft.
B Depth (min)	100 ft.

LOT COVERAGE	
Permeable Surface (min)	35%
Landscape (min)	25%

b. Placement

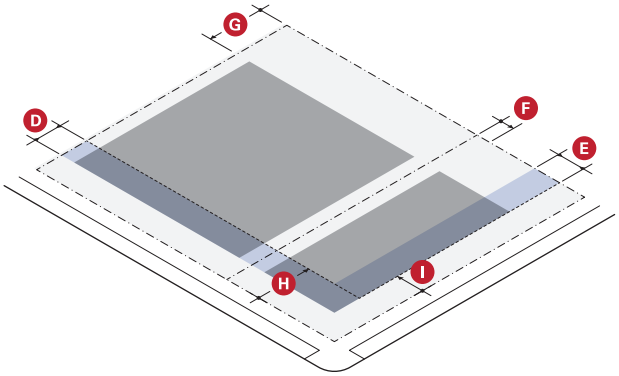

BUILDING SETBACKS		
Contextual Front Setback (see §.3.B.2.b)	Required	
D Primary Front Setback	10' min.	20' max.
E Secondary Front Setback	10' min.	20' max.
F Side Setback (min)	5 ft.	
G Rear Setback (min)	20 ft.	

PARKING SETBACKS	
H Primary Front Setback (min)	20 ft.
I Secondary Front Setback (min)	10 feet

APARTMENT House (cont.)

A moderate floor plate, detached, residential building type with six to ten dwelling units designed to appear as a large house.

c. Height & Massing

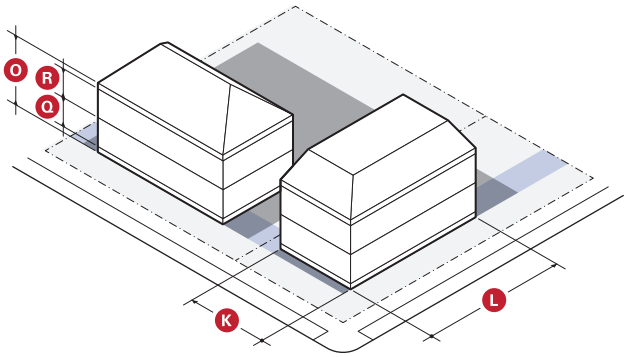

MAIN BODY		
J Facade Build Out (min)	70%	
K Width (min/max)	28 feet	56 feet
L Depth (min/max)	44 feet	68 feet
N Building Height (max)	2.5 stories (28 feet)	
P Story Height (min/max)	9 feet	12 feet
First Floor Elevation (min)	2 feet	

PERMITTED BUILDING COMPONENTS	
Awning	See §3.D.2
Entry Canopy	See §3.D.3
Bay	See §3.D.4
Balcony	See §3.D.5
Dormer Window	See §3.D.8
Cross Gable	See §3.D.9

d. Uses & Features

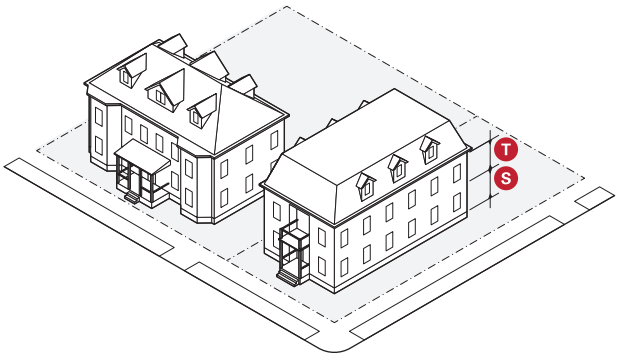

FACADE COMPOSITION		
S Ground Story Fenestration (min/max)	20%	50%
T Upper Story Fenestration (min/max)	20%	50%

PERMITTED BUILDING FRONTAGE	(1 required)
Stoop	See §3.E.2
Portico	See §3.E.3
Porch, Projecting	See §3.E.4

USE & OCCUPANCY		
Use Category	Residential	
Dwelling Units (min/max)	6	10
Outdoor Amenity Space (min)	1/ Dwelling Unit	

10. APARTMENT BUILDING

A large floor plate, multi-story, residential building type with more than six dwelling units.

a. Lot Standards

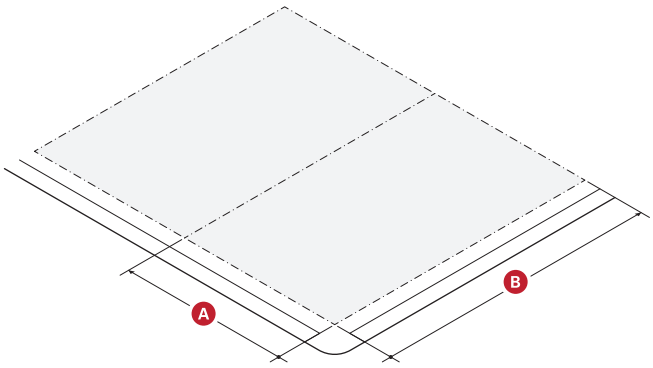

LOT DIMENSIONS		
A Width (min)	55 ft.	
B Depth (min)	90 ft.	
C Area (square feet)		
UR (min/max)	4,000	14,000
3MU (max)	20,000	
4MU (max)	28,000	
5MU (max)	40,000	
7MU & 10MU (max)	45,000	

LOT COVERAGE	
Permeable Surface	--
NR & UR (min)	35%
3MU (min/max)	10%
4MU (min/max)	10%
5MU (max)	10%
7MU & 10MU (max)	10%
Landscape	
NR & UR (min)	25%

b. Placement

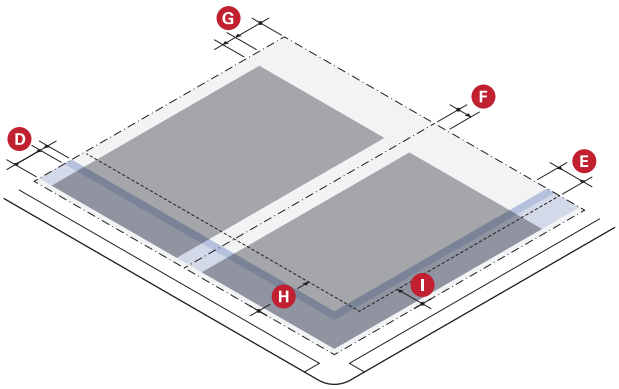

BUILDING SETBACKS		
Contextual Front Setback (see §.3.B.2.b)	Required	
D Primary Front Setback	--	
UR (min/max)	10' min.	20' max.
3MU & 4MU	2' min.	12' max.
5MU - 10MU	2' min.	15' max.
E Secondary Front Setback	--	
UR (min/max)	10' min.	20' max.
3MU & 4MU	2' min.	12' max.
5MU - 10MU	2' min.	15' max.
F Side Setback	--	
UR	5 ft.	
3MU - 10MU	0 ft.	
Side Setback Abutting NR (min)	5 ft.	
G Rear Setback (min)	10 ft.	
Rear Setback Abutting NR	15 ft.	

PARKING SETBACKS	
H Primary Front Setback (min)	--
Surface Parking	20 feet
Structured Parking	20 feet
I Secondary Front Setback (min)	--
Surface Parking	10 feet
Structured Parking	--
UR	10 feet
3MU - 10MU	2 feet

APARTMENT Building (cont.)

A large floor plate, multi-story, residential building type with more than six dwelling units.

c. Height & Massing

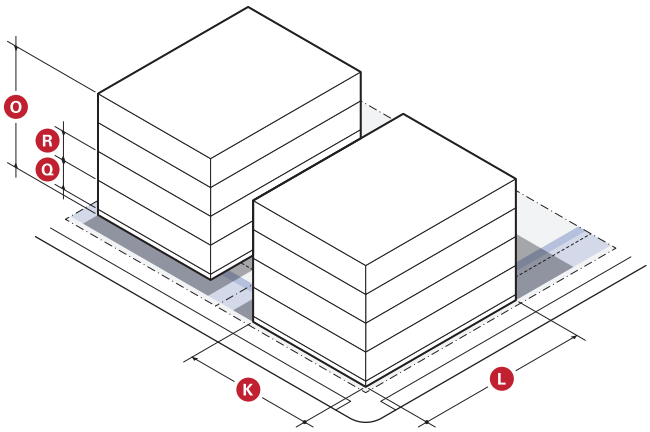

MAIN BODY	
J Facade Build Out (min)	80%
M Floor Plate (max)	--
UR	7,000 sq. ft.
3 MU	15,000 sq. ft.
4 MU	22,000 sq. ft.
5MU	32,000 sq. ft.
7MU & 10MU	36,000 sq. ft.
N Building Height (min)	2 stories
O Building Height (max)	--
UR	4 stories (45 ft.)
3MU	3 stories (35 ft.)
4MU	4 stories (45 ft.)
5MU	5 stories (55 ft.)
7MU	7 stories (75 ft.)
10MU	10 stories (105 ft.)
P Story Height (min)	9 ft.
First Floor Elevation (min)	2 ft.

PERMITTED BUILDING COMPONENTS	
Awning	See §3.D.2
Entry Canopy	See §3.D.3
Bay	See §3.D.4
Balcony	See §3.D.5

d. Uses & Features

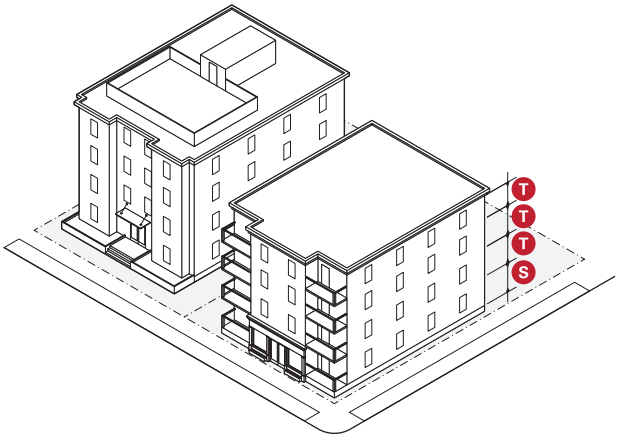

FACADE COMPOSITION		
S Ground Story Fenestration (min/max)	20% min.	50% max.
T Upper Story Fenestration (min/max)	20% min.	50% max.

PERMITTED BUILDING FRONTAGE	(1 required)
Stoop	See §3.E.2
Portico	See §3.E.3
Forecourt	See §3.E.7
Lobby Entrance	See §3.E.8
Lightwell	See §3.E.11

USE & OCCUPANCY	
Use Category	Residential
Dwelling Units (min.)	7 min.
Average Dwelling Unit Size (min)	900 sq. ft.
Outdoor Amenity Space (min)	1/ Dwelling Unit

11. ROW HOUSES

A moderate to large floor plate, residential building type consisting of three (3) to ten (10) side by side row houses, each with one (1) dwelling unit.

a. Lot Standards

b. Placement

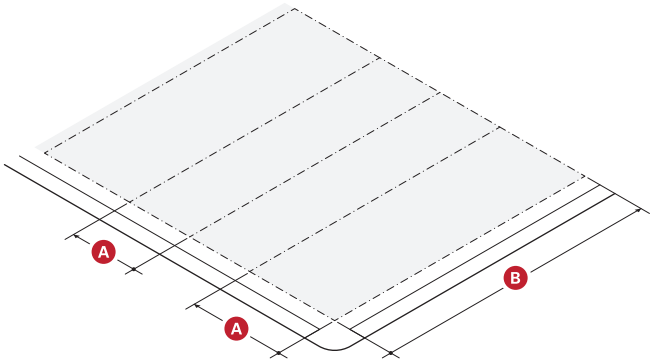

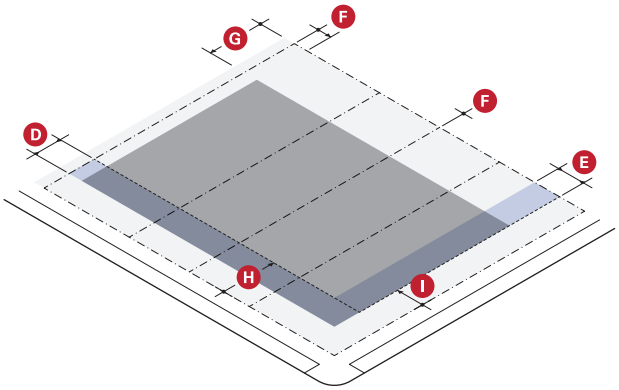

SITE DIMENSIONS		
Width (min/max)	82 feet	250 feet

LOT DIMENSIONS		
A Width (min)	--	
Interior Lot in Sequence	24 feet	
End Lot in Sequence	29 feet	
B Depth (min)	80 feet	

LOT COVERAGE	
Permeable Surface (min)	35%
Landscape (min)	25%

BUILDING SETBACKS		
Contextual Front Setback (see §.3.B.2.b)	Required	
D Primary Front Setback (min/max)	10 feet	20 feet
E Secondary Front Setback (min/max)	10 feet	20 feet
F Side Setback (min)	--	
Party Lot Line	0 feet	
Side Lot Line	5 feet	
G Rear Setback (min)	20 feet	

PARKING SETBACKS	
H Primary Front Setback (min)	20 feet
I Secondary Front Setback (min)	10 feet

ROW Houses (cont.)

A moderate to large floor plate, residential building type consisting of three (3) to ten (10) side by side row houses, each with one (1) dwelling unit.

c. Height & Massing

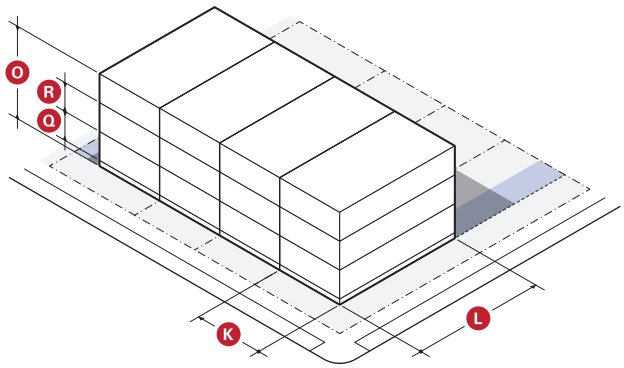

d. Uses & Features

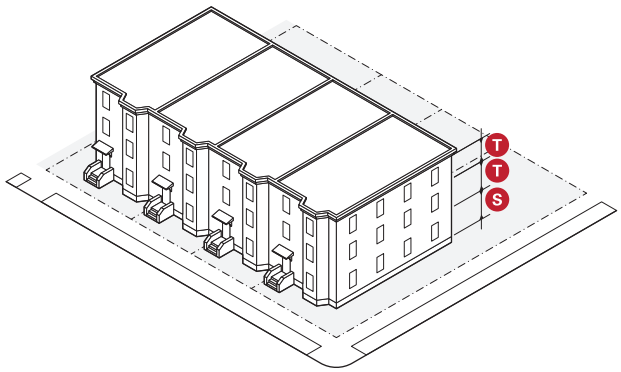

MAIN BODY		
J Facade Build Out (min)	70%	
K Width per Row House (min/max)	24 feet	30 feet
L Depth (min/max)	34 feet	60 feet
Row Houses in sequence	3	10
N Building Height (min)	2 stories	
O Building Height (max)	3 stories (40 feet)	
P Story Height (min)	9 feet	
First Floor Elevation (min)	2 feet	

FACADE COMPOSITION		
S Ground Story Fenestration (min/max)	20% min.	50% max.
T Upper Story Fenestration (min/max)	20% min.	50% max.

PERMITTED BUILDING FRONTAGE	(1 required)
Stoop	See §3.E.2
Portico	See §3.E.3
Porch, Projecting	See §3.E.4
Lightwell	See §3.E.11

PERMITTED BUILDING COMPONENTS	
Awning	See §3.D.2
Entry Canopy	See §3.D.3
Bay	See §3.D.4
Balcony	See §3.D.5
Deck	See §3.D.6
Dormer Window	See §3.D.8

USE & OCCUPANCY		
Permitted Use Category	Residential	
Dwelling Units per Site (min/max)	3	10
Dwelling Units per individual Row House (max)	1 Dwelling Unit	
Outdoor Amenity Space (min)	1/ Dwelling Unit	

12. SHOP HOUSE

A house building type with the ground story converted for commercial use and the residential appearance of upper stories maintained.

a. Lot Standards

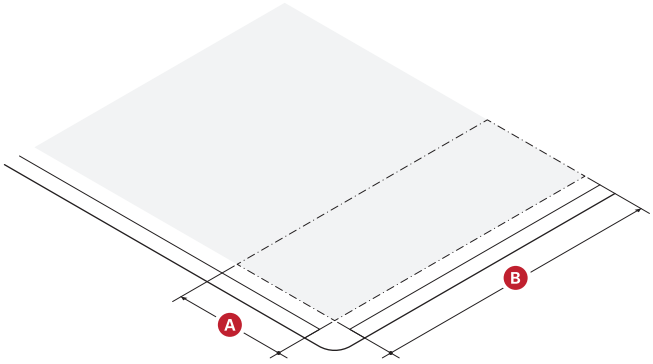

LOT DIMENSIONS	
A Width (min)	34 ft.
B Depth (min)	80 ft.

LOT COVERAGE	
Permeable Surface	35%

b. Placement

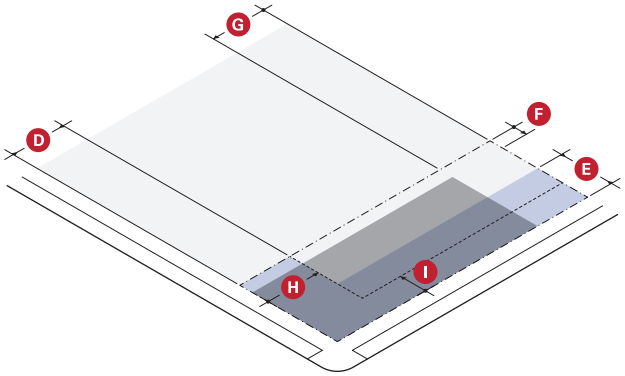

BUILDING SETBACKS		
Contextual Front Setback (see §.3.B.2.b)	Required	
D Primary Front Setback	--	--
Ground Story (min/max)	--	--
NR & UR	0 feet	20 feet
3MU	2 feet	20 feet
Upper Story (min/max)	10 feet	20 feet
E Secondary Front Setback	--	--
Ground Story (min/max)	--	--
NR & UR	0 feet	20 feet
3MU	2 feet	20 feet
Upper Story (min/max)	10 feet	20 feet
F Side Setback (min)	5 ft.	
G Rear Setback (min)	20 ft.	

PARKING SETBACKS	
H Primary Front Setback (min)	20 ft.
I Secondary Front Setback (min)	10 feet

SHOP House (cont.)

A house building type with the ground story converted for commercial use and the residential appearance of upper stories maintained.

c. Height & Massing

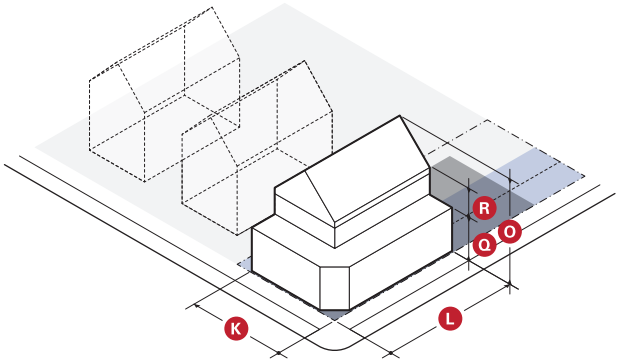

MAIN BODY		
J Facade Build Out (min)	80%	
K Width (min/max)	24 feet	30 feet
L Depth (min/max)	28 feet	48 feet
N Building Height (max)	2.5 stories (28 feet)	
Q Ground Story Height (min)	9 feet	
R Upper Story Height (min)	9 feet	

PERMITTED BUILDING COMPONENTS	
Awning	See §3.D.2
Entry Canopy	See §3.D.3
Bay	See §3.D.4
Balcony	See §3.D.5
Deck	See §3.D.6

d. Uses & Features

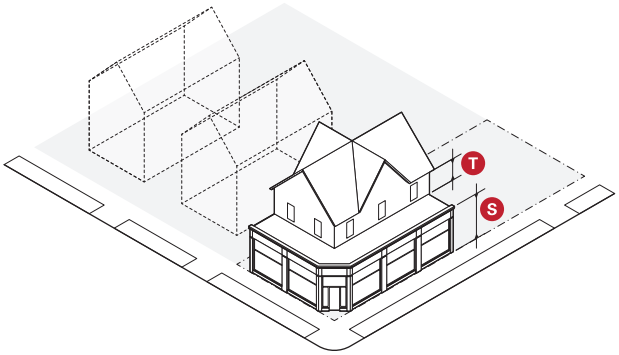

FACADE COMPOSITION		
S Ground Story Fenestration (min)	60%	
T Upper Story Fenestration (min/max)	20%	50%

PERMITTED BUILDING FRONTAGE	(1 required)
Stoop	See §3.E.2
Portico	See §3.E.3
Porch, Projecting	See §3.E.4
Porch, Engaged	See §3.E.5
Storefront	See §3.E.9

USE & OCCUPANCY	
Tenant Space Depth (min)	n/a
Ground Story Permitted Use	See §2.A.3.b; §2.B.3.b
Upper Story Permitted Use	Residential
Dwelling Units (max)	1
Outdoor Amenity Space (min)	1/ Dwelling Unit

13. NEIGHBORHOOD STORE

A moderate floor plate, single story building type designed for commercial purposes.

a. Lot Standards

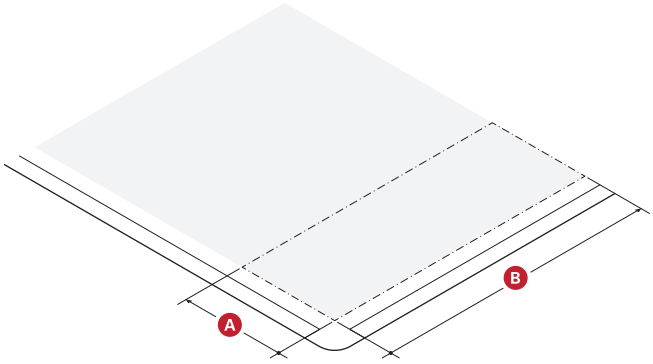

LOT DIMENSIONS	
A Width (min)	30 ft.
B Depth (min)	40 ft.

LOT COVERAGE	
Permeable Surface	10%

b. Placement

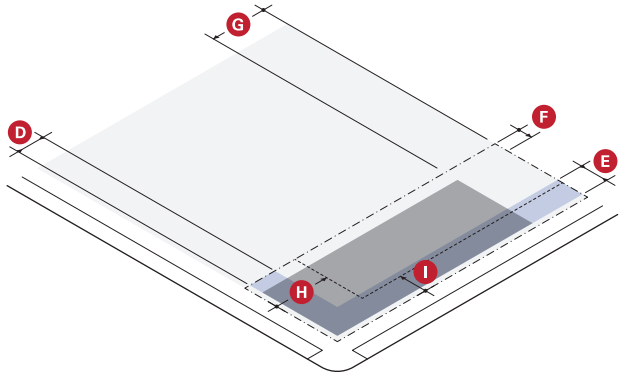

BUILDING SETBACKS		
Contextual Front Setback (see §.3.B.2.b)	Required	
D Primary Front Setback	0 feet	12' max.
E Secondary Front Setback	0 feet	12' max.
F Side Setback (min)	5 ft.	
G Rear Setback (min)	20 ft.	

PARKING SETBACKS	
H Primary Front Setback (min)	20 ft.
I Secondary Front Setback (min)	10 feet

NEIGHBORHOOD Store (cont.)

A moderate floor plate, single story building type designed for commercial purposes.

c. Height & Massing

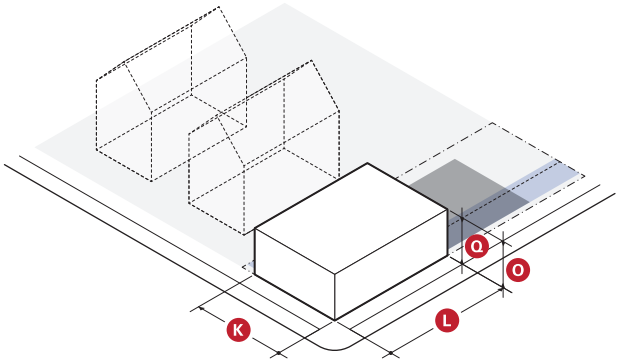

MAIN BODY		
J Facade Build Out (min)	80%	
K Width (min/max)	30' min.	60' max.
L Depth (min/max)	40' min.	60' max.
N Building Height (max)	1 story (20 feet)	
Q Ground Story Height (min)	12 feet	
R Upper Story Height (min)	9 feet	

PERMITTED BUILDING COMPONENTS	
Awning	See §3.D.2
Entry Canopy	See §3.D.3

d. Uses & Features

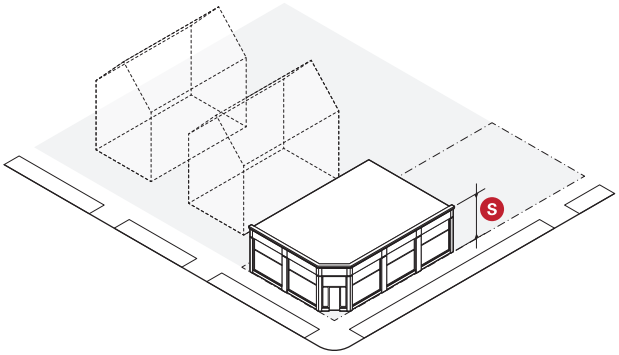

FACADE COMPOSITION		
S Ground Story Fenestration (min)	60%	
T Upper Story Fenestration (min/max)	20% min.	50% max.
Blank Wall (max)	20 feet	

PERMITTED BUILDING FRONTAGE	(1 required)
Storefront	See §3.E.9

USE & OCCUPANCY	
Tenant Space Depth (min)	20 feet
Permitted Use	See §2.A.3.b; §2.B.3.b

14. MIXED-USE BUILDING

A multi-story building type with ground floor commercial and upper story residential uses with six or more dwelling units.

a. Lot Standards

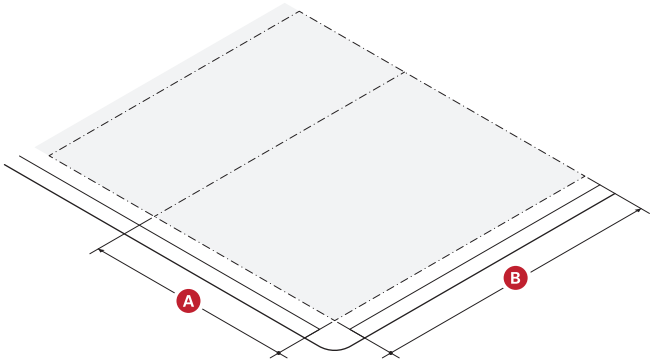

b. Placement

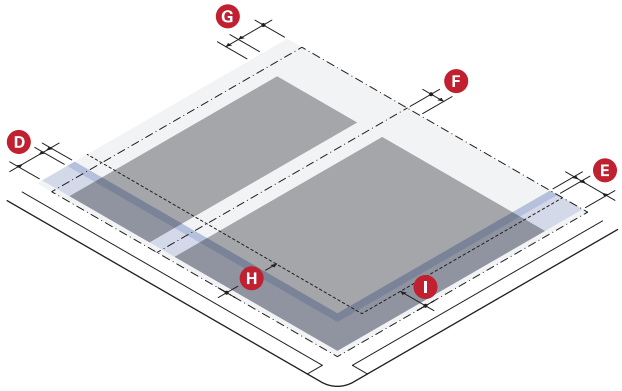

LOT DIMENSIONS		
A Width (min/max)	--	
3MU & 4MU	30 feet	150 feet
5MU - 10MU	30 feet	200 feet
B Depth (min)	--	
3MU & 4MU	40 feet	
5MU - 10MU	100 feet	
C Area (max)	--	
3MU	20,000 sq. ft.	
4MU	28,000 sq. ft.	
5MU	40,000 sq. ft.	
7MU & 10MU	45,000 sq. ft.	

LOT COVERAGE	
Permeable Surface	10%

BUILDING SETBACKS		
Contextual Front Setback (see §.3.B.2.b)	Required	
D Primary & Secondary Front Setback (min/max)		
3MU & 4MU	2 feet	12 feet
5MU - 10MU	2 feet	15 feet
FAB & CI	2 feet	12 feet
F Side Setback (min)	0 feet	
Side Setback Abutting NR (min)	5 feet	
G Rear Setback (min)	10 feet	
Rear Setback Abutting NR (min)	15 feet	

PARKING SETBACKS	
H Primary Front Setback (min)	--
3MU & FAB	20 feet
4MU - 10MU, CI	30 feet
I Secondary Front Setback (min)	--
Surface Parking	10 feet
Structured Parking	2 feet
3MU - 5MU, FAB, CI	2 feet
7MU & 10MU	30 feet

MIXED-USE Building (cont.)

A multi-story building type with ground floor commercial and upper story residential uses with six or more dwelling units.

c. Height & Massing

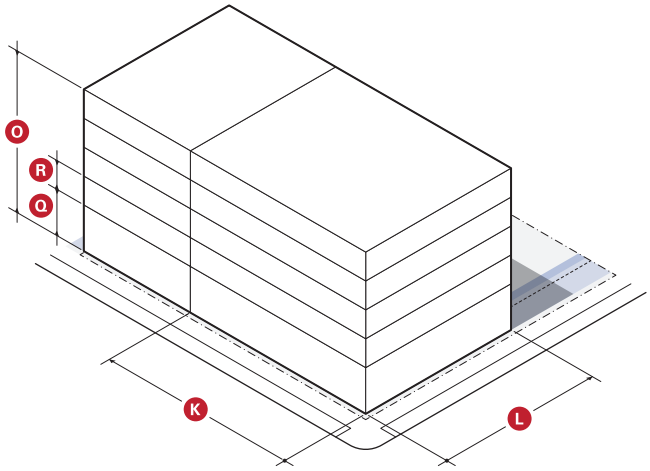

d. Uses & Features

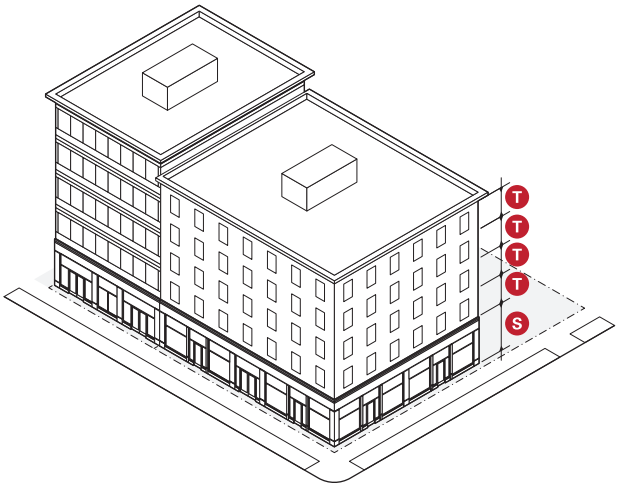

MAIN BODY	
J Facade Build Out (min)	80%
M Floor Plate (max)	--
3MU	15,000 sq. ft.
4MU	22,000 sq. ft.
5MU	32,000 sq. ft.
7MU & 10MU	--
Up to 5 stories	36,000 sq. ft.
Above 5 stories	18,000 sq. ft.
N Building Height (min)	2 stories
O Building Height (max)	--
3MU	3 stories (35 ft.)
4MU	4 stories (50 ft.)
5MU	5 stories (60 ft.)
7MU	7 stories (85 ft.)
10MU	10 stories (115 ft.)
Q Ground Story Height (min)	--
3MU	12 ft.
4MU - 10MU	14 ft.
R Upper Story Height (min)	9 ft.

PERMITTED BUILDING COMPONENTS	
Awning	See §3.D.2
Entry Canopy	See §3.D.3
Bay	See §3.D.4
Balcony	See §3.D.5

FACADE COMPOSITION	
S Ground Story Fenestration (min)	--
3MU & 4MU	60%
5MU - 10MU	70%
T Upper Story Fenestration (min/max)	20% min 50% max.
Blank Wall (max)	20 ft.

PERMITTED BUILDING FRONTAGE	(1 required)
Forecourt	See §3.E.7
Lobby Entrance	See §3.E.8
Storefront	See §3.E.9
Terrace	See §3.E.10
Lightwell	See §3.E.11

USE & OCCUPANCY	
Tenant Space Depth (min)	--
3MU	20 feet
4MU - 10MU	30 feet
Ground Story Permitted Use	Non-Residential
Upper Story Permitted Use Category	Residential
Dwelling Units (min)	--
3MU & 4MU	5 Units
5MU - 10MU	7 Units
Average Dwelling Unit Size (min)	900 sq. ft.
Outdoor Amenity Space (min)	1/ Dwelling Unit

15. COMMERCIAL BUILDING

A multi-story building type limited to commercial uses.

a. Lot Standards

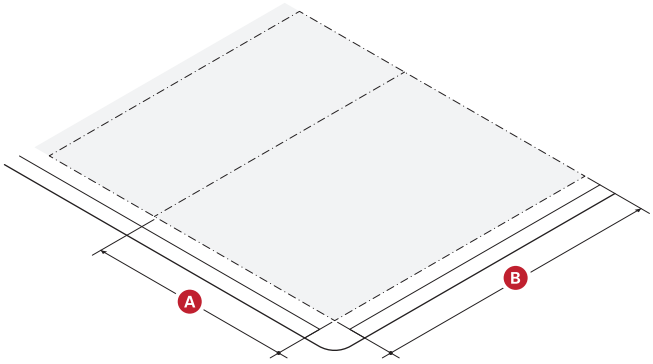

LOT DIMENSIONS		
A Width (min/max)		
3MU, 4MU, FAB, CI	30 ft.	150 ft.
5MU - 10MU	30 ft.	200 ft.
B Depth (min)	--	
3MU, 4MU, & FAB	40 ft.	
5MU - 10MU	100 ft.	
C Area (max)	--	
3MU & FAB	20,000 sq. ft.	
4MU & CI	28,000 sq. ft.	
5MU	40,000 sq. ft.	
7MU & 10MU	45,000 sq. ft.	

LOT COVERAGE	
Permeable Surface	10%

b. Placement

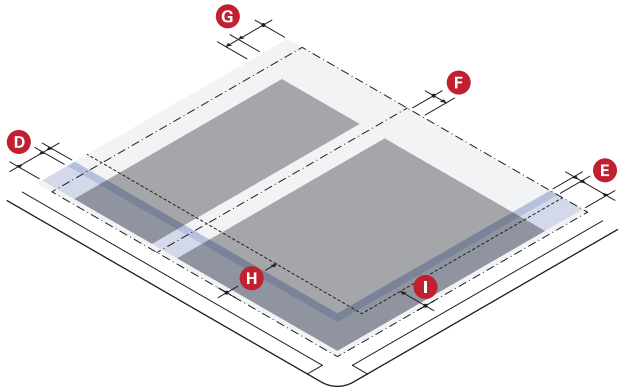

BUILDING SETBACKS		
Contextual Front Setback (see §.3.B.2.b)	Required	
D Primary & Secondary Front Setback		
3MU & 4MU (min/max)	2 feet	12 feet
5MU - 10MU (min/max)	2 feet	15 feet
FAB & CI (min/max)	2 feet	12 feet
F Side Setback (min)	0 ft.	
Side Setback Abutting NR (min)	5 ft.	
G Rear Setback (min)	10 ft.	
Rear Setback Abutting NR (min)	15 ft.	

PARKING SETBACKS	
H Primary Front Setback (min)	--
3MU & FAB	20 feet
4MU - 10MU, CI	30 feet
I Secondary Front Setback (min)	--
Surface Parking	10 feet
Structured Parking	2 feet
3MU - 5MU, FAB, CI	2 feet
7MU & 10MU	30 feet

COMMERCIAL Building (cont.)

A multi-story building type limited to commercial uses.

c. Height & Massing

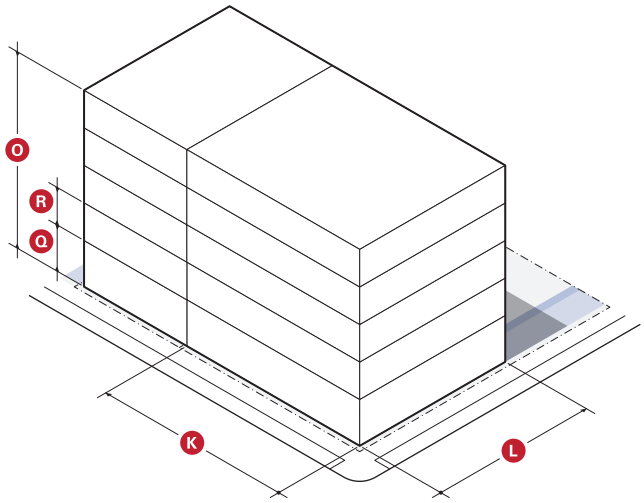

d. Uses & Features

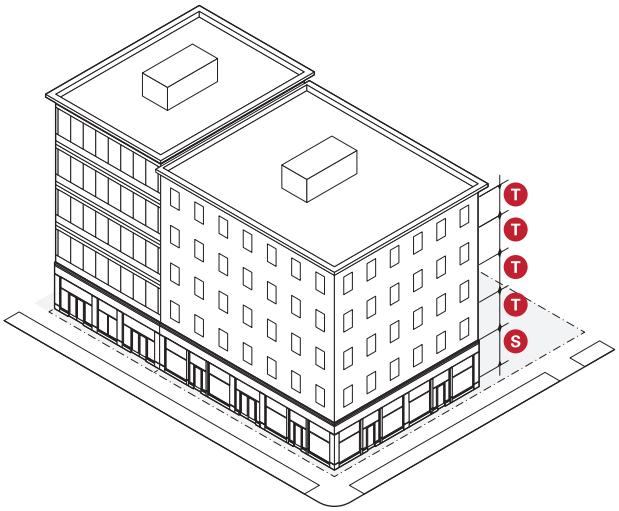

MAIN BODY	
J Facade Build Out (min)	80%
M Floor Plate (max)	--
3MU & FAB	15,000 sq. ft.
4MU & CI	22,000 sq. ft.
5MU	30,000 sq. ft.
7MU & 10MU	--
Up to 5 stories	36,000 sq. ft.
Above 5 stories	20,000 sq. ft.
N Building Height (min)	--
3MU - 10MU	2 stories
O Building Height (max)	--
3MU & FAB	3 stories (45 ft.)
4MU & CI	4 stories (55 ft.)
5MU	5 stories (70 ft.)
7MU	7 stories (100 ft.)
10MU	10 stories (135 ft.)
Q Ground Story Height (min)	--
3MU & FAB	12 ft.
4MU - 10MU, CI	14 ft.
R Upper Story Height (min)	9 ft.

PERMITTED BUILDING COMPONENTS	
Awning	See §3.D.2
Entry Canopy	See §3.D.3
Bay	See §3.D.4
Balcony	See §3.D.5

FACADE COMPOSITION		
S Ground Story Fenestration (min)	--	
3MU, 4MU, FAB, & CI	60%	
5MU - 10MU	70%	
T Upper Story Fenestration (min/max)	20% min	50% max.
Blank Wall (max)	20 ft.	

PERMITTED BUILDING FRONTAGE	(1 required)
Forecourt	See §3.E.7
Lobby Entrance	See §3.E.8
Storefront	See §3.E.9
Terrace	See §3.E.10
Lightwell	See §3.E.11

PEDESTRIAN ACCESS	
Principal Entrance Spacing (min)	30 ft.

USE & OCCUPANCY	
Tenant Space Depth (min)	--
3MU & FAB	20 ft.
4MU - 10MU, CI	30 ft.
Permitted Use	See Article 5: Use Provisions

16. PRODUCTION BUILDING

A moderate to large floor plate, up to two story building type, often naturally lit with a monitor, clerestory, or sawtooth roof.

a. Lot Standards

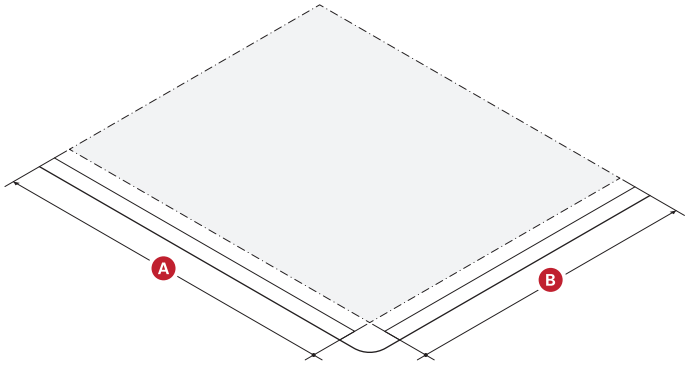

LOT DIMENSIONS	
A Width (min)	40 ft.
B Depth (min)	100 ft.
C Area (min)	5,000 sq. ft.

LOT COVERAGE	
Permeable Surface	10%

b. Placement

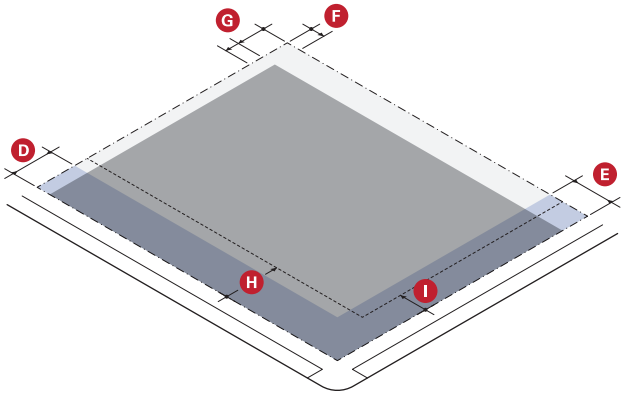

BUILDING SETBACKS		
D Primary Front Setback	2' min.	15' max.
E Secondary Front Setback	2' min.	15' max.
F Side Setback (min)	0 ft.	
Side Setback Abutting NR (min)	5 ft.	
G Rear Setback (min)	10 ft.	
Rear Setback Abutting NR	15 ft.	

PARKING SETBACKS	
H Primary Front Setback (min)	--
Surface Parking	20 feet
Structured Parking	20 feet
I Secondary Front Setback (min)	--
Surface Parking	10 feet
Structured Parking	2 feet

PRODUCTION Building (cont.)

A moderate to large floor plate, up to two story building type, often naturally lit with a monitor, clerestory, or sawtooth roof.

c. Height & Massing

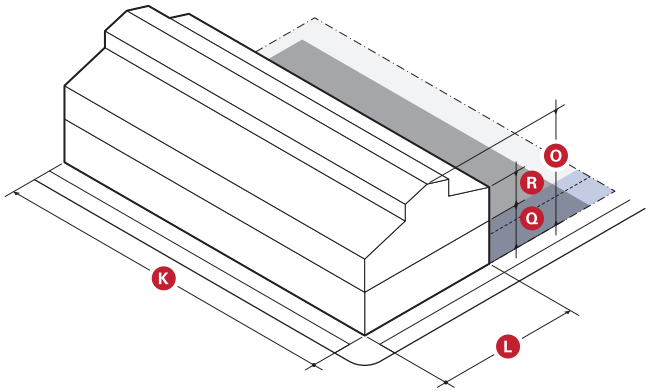

d. Uses & Features

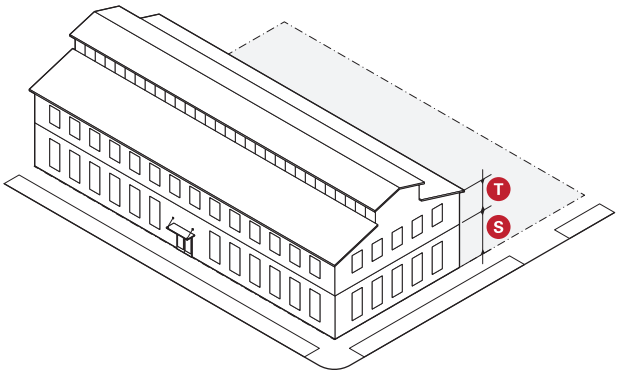

MAIN BODY	
J Facade Build Out (min)	50%
M Floor Plate	45,000 sq. ft.
O Building Height (max)	2 stories (40 ft.)

FACADE COMPOSITION	
S Ground Story Fenestration, Front (min)	40%
T Ground Story Fenestration, Secondary Front (min)	20%
Blank Wall (max)	50 ft.

PERMITTED BUILDING COMPONENTS	
Awning	See §3.D.2
Entry Canopy	See §3.D.3

PERMITTED BUILDING FRONTAGE	(1 required)
Lobby Entrance	See §3.E.8
Storefront	See §3.E.9
Terrace	See §3.E.10

OCCUPANCY	
Permitted Use	See Article 5: Use Provisions

17. FABRICATION LOFT

A moderate to large floor plate, multi-story building type subdivided for multiple tenants, often designed with tall ceilings, expansive windows, wide corridors, service elevators, and loading docks.

a. Lot Standards

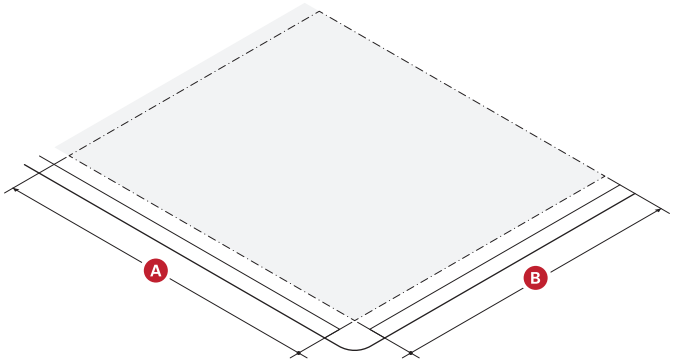

LOT DIMENSIONS	
A Width (min)	40 ft.
B Depth (min)	100 ft.
C Area (min)	5,000 sq. ft.

LOT COVERAGE	
Permeable Surface	10%

b. Placement

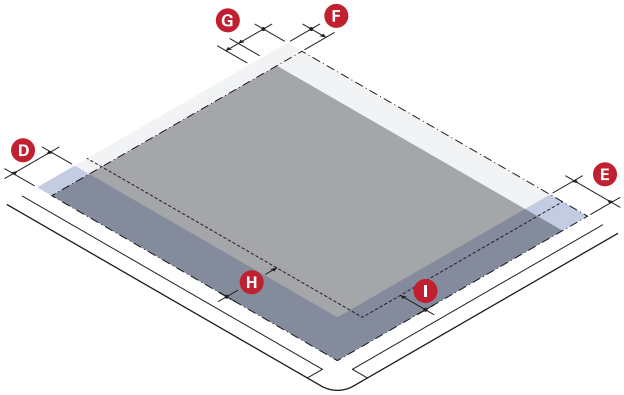

BUILDING SETBACKS		
D Primary Front Setback	2' min.	15' max.
E Secondary Front Setback	2' min.	15' max.
F Side Setback (min)	0 ft.	
Side Setback Abutting NR (min)	5 ft.	
G Rear Setback (min)	10 ft.	
Rear Setback Abutting NR	15 ft.	

PARKING SETBACKS	
H Primary Front Setback (min)	--
Surface Parking	20 feet
Structured Parking	20 feet
I Secondary Front Setback (min)	--
Surface Parking	10 feet
Structured Parking	2 feet

FABRICATION Loft (cont.)

A moderate to large floor plate, multi-story building type subdivided for multiple tenants, often designed with tall ceilings, expansive windows, wide corridors, service elevators, and loading docks.

c. Height & Massing

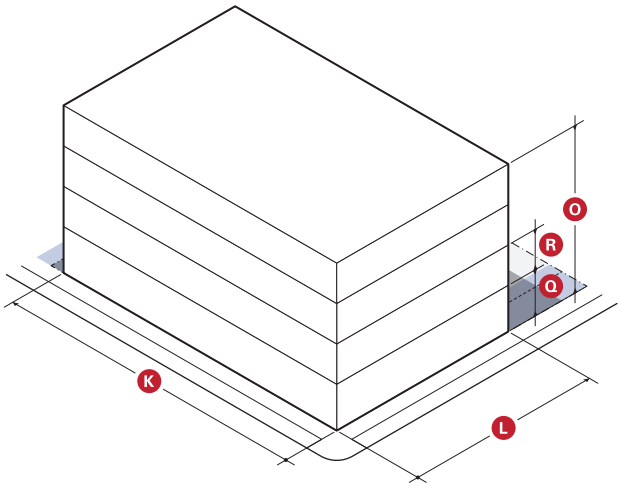

d. Uses & Features

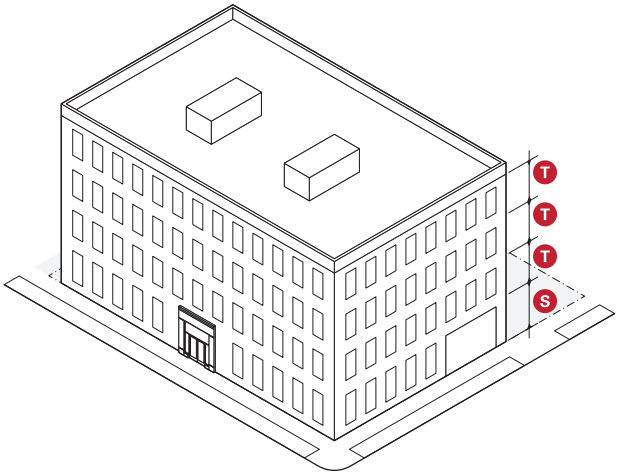

MAIN BODY	
J Facade Build Out (min)	50%
M Floor Plate	45,000 sq. ft.
O Building Height (max)	4 stories (60 feet)

FACADE COMPOSITION	
S Ground Story Fenestration, Front (min)	40%
T Ground Story Fenestration, Secondary Front (min)	20%
Blank Wall (max)	50 ft.

PERMITTED BUILDING COMPONENTS	
Awning	See §3.D.2
Entry Canopy	See §3.D.3

PERMITTED BUILDING FRONTAGE	(1 required)
Lobby Entrance	See §3.E.8
Storefront	See §3.E.9
Terrace	See §3.E.10

OCCUPANCY	
Permitted Use	See Article 5: Use Provisions

D. BUILDING COMPONENTS

1. GENERAL

a. Building components are accessory features that increase the habitable square footage or enhance the usefulness of a building.

b. Building components are permitted according to Table 3.4.

TABLE 3.4 Permitted Building Components

Y - Permitted
N - NOT Permitted

	Cottage	House	Paired House	Duplex	Triple Decker	Paired Triple Decker	Four-Plex	Six-Plex	Apartment House	Apartment Building	Row Houses	Shop House	Neighborhood Store	Mixed-Use Building	Commercial Building	Production Building	Fabrication Loft	Type Specific Standards
Awning	Y	Y	Y	Y	Y	Y	Y	Y	Y	Y	Y	Y	Y	Y	Y	Y	Y	§3.D.2. Awning
Entry Canopy	Y	Y	Y	Y	Y	Y	Y	Y	Y	Y	Y	Y	Y	Y	Y	Y	Y	§3.D.3. Entry Canopy
Bay	Y	Y	Y	Y	Y	Y	Y	Y	Y	Y	Y	Y	N	Y	Y	N	N	§3.D.4. Bay
Balcony	Y	Y	Y	Y	Y	Y	Y	Y	Y	Y	Y	Y	N	Y	Y	N	N	§3.D.5. Balcony
Deck	Y	Y	Y	Y	N	N	Y	Y	N	N	Y	Y	N	N	N	N	N	§3.D.6. Deck
Roof Deck	Y	Y	Y	Y	Y	Y	Y	Y	Y	Y	Y	Y	Y	Y	Y	Y	Y	§3.D.7. Roof Deck
Dormer Window	Y	Y	Y	Y	N	N	Y	Y	Y	N	Y	N	N	N	N	N	N	§3.D.8. Dormer Window
Cross Gable	Y	Y	Y	Y	N	N	Y	Y	Y	N	N	N	N	N	N	N	N	§3.D.9. Cross Gable
Side Wing	Y	Y	Y	Y	N	N	N	N	N	N	N	N	N	N	N	N	N	§3.D.10. Side Wing
Rear Addition	Y	Y	Y	Y	N	N	N	N	N	N	Y	N	N	N	N	N	N	§3.D.11. Rear Addition

2. AWNING

A wall mounted, pitched covering extending from a building to provide shade and weather protection for pedestrians.

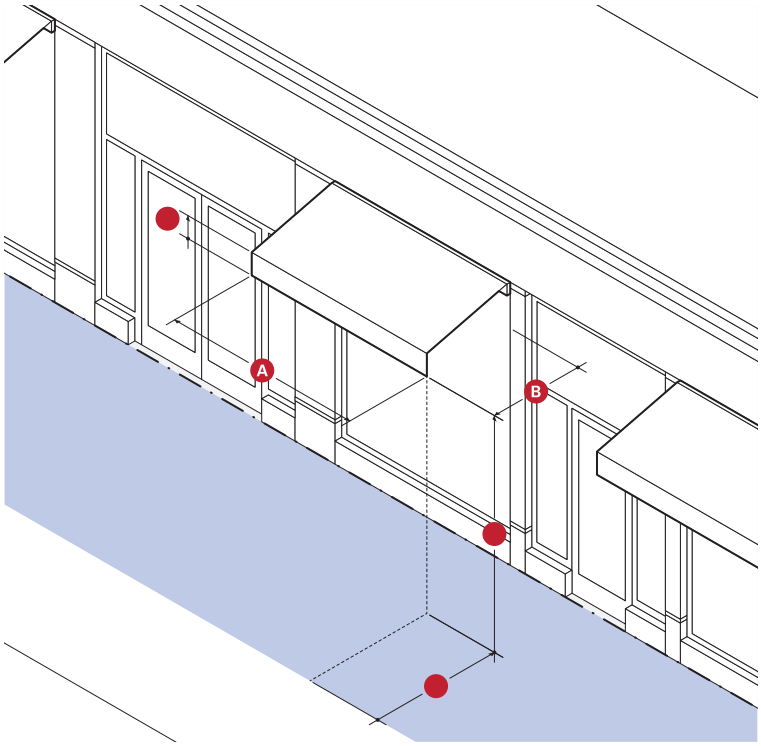

DIMENSIONS		
Width (min)	see below	
Awning Depth (min)	4 feet	
Clearance (min)	8 feet	
Setback from Curb (min)	1.5 feet	
Valance Height (min/max)	6 inches	12 inches

STANDARDS

i. Awnings must be securely attached to and supported by the building, and must fit the windows or doors the awning is attached to.
ii. An awning must be made of durable, weather-resistant material that is water repellant.
iii. Internally illuminated or back-lit awnings are prohibited.
iv. An awning that projects over the sidewalk of a public thoroughfare requires compliance with all City Ordinances.

3. ENTRY CANOPY

A wall-mounted structure providing shade and weather protection over the entrance of a building.

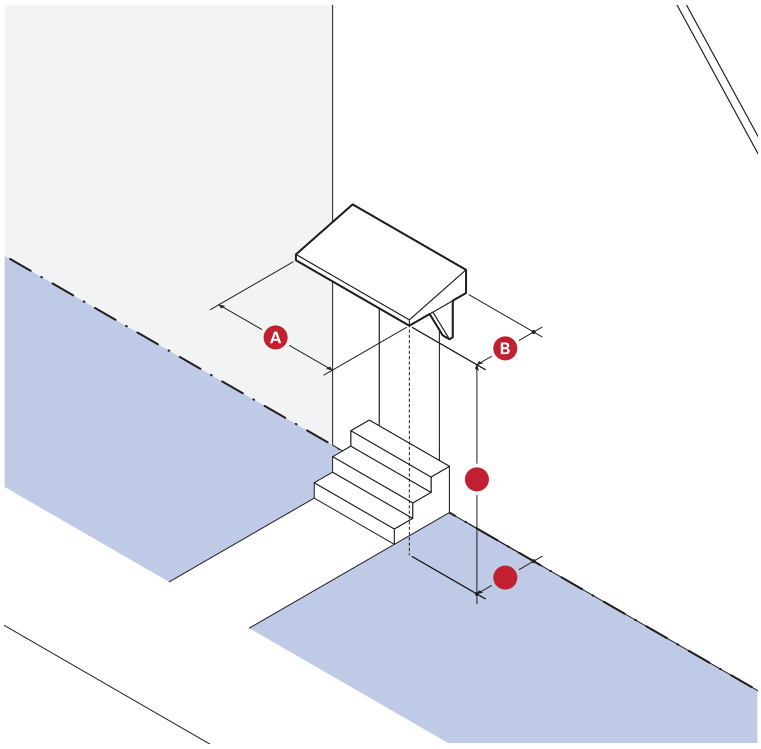

DIMENSIONS	
Width (min)	see below
Depth (min)	3 feet
Clearance (min)	8 feet clear
Permitted Front Encroachment (max)	100%

STANDARDS

i. Entry canopies must be visually supported by brackets, cables, or rods.
ii. The width of an entry canopy must be equal to or greater than the width of the doorway surround or exterior casing it is mounted over.
iii. An entry canopy that encroaches into the right-of-way of a public thoroughfare requires compliance with all City Ordinances.

4. BAY

A window assembly extending from the main body of a building to permit increased light, multi-direction views, and articulate a buildings facade.

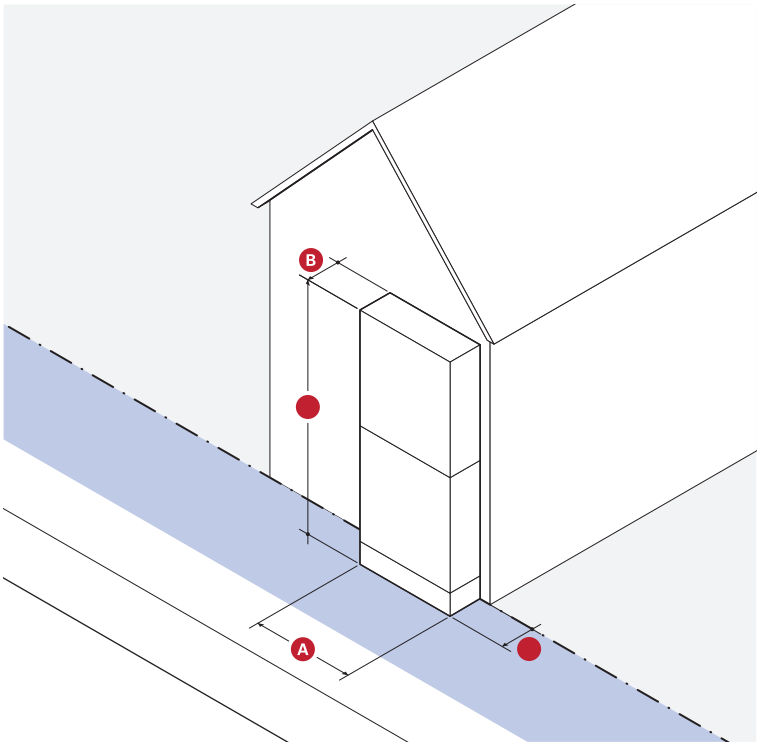

DIMENSIONS	
Width (max)	50% of Facade or Elevation
Depth (min/max)	12 inches 3 feet
Fenestration (min)	60%
Height	Height of the building
Permitted Front Encroachment (max)	3 feet

STANDARDS

i. Bays must have a foundation extend all the way to ground level or be visually supported by brackets or other architectural supports.

ii. Bays projecting over the sidewalk of a public thoroughfare must have two (2) stories of clearance and require compliance with all City Ordinances.

5. BALCONY

A platform with a railing that provides outdoor amenity space.

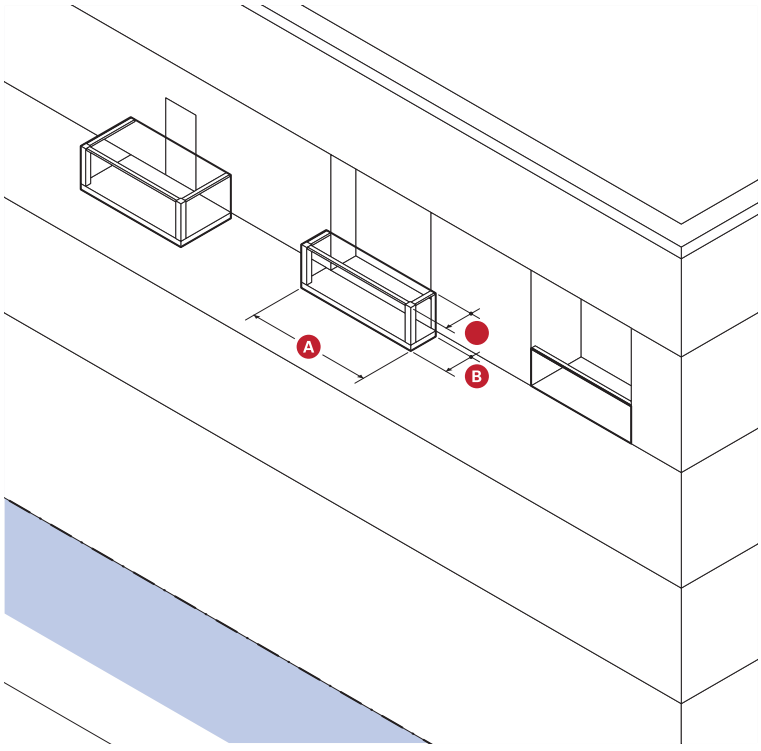

a. DIMENSIONS	
Width (min)	5 feet
Depth (min)	5 feet
Area (min)	50 sq ft.
Clearance (min)	One Story
Permitted Front Encroachment (max)	5 feet

b. STANDARDS

i. Balconies may be recessed, projecting, a combination of the two, or terraced as part of the roof of a portico, porch, or bay.

ii. A projecting balcony must have a clear height above the ground of at least ten feet.

iii. A balcony that projects over the sidewalk of a public thoroughfare requires compliance with all City Ordinances.

iv. The balustrade of any balcony oriented toward a front lot line must permit visual supervision of the public realm through the posts and rails.

v. The balustrade of any balcony oriented toward a side or rear lot line abutting the NR district must include sight obscuring visual screening so that it is at least fifty percent (50%) opaque.

6. DECK

A roofless, raised platform accessible from a secondary entrance to a building that provides outdoor amenity space.

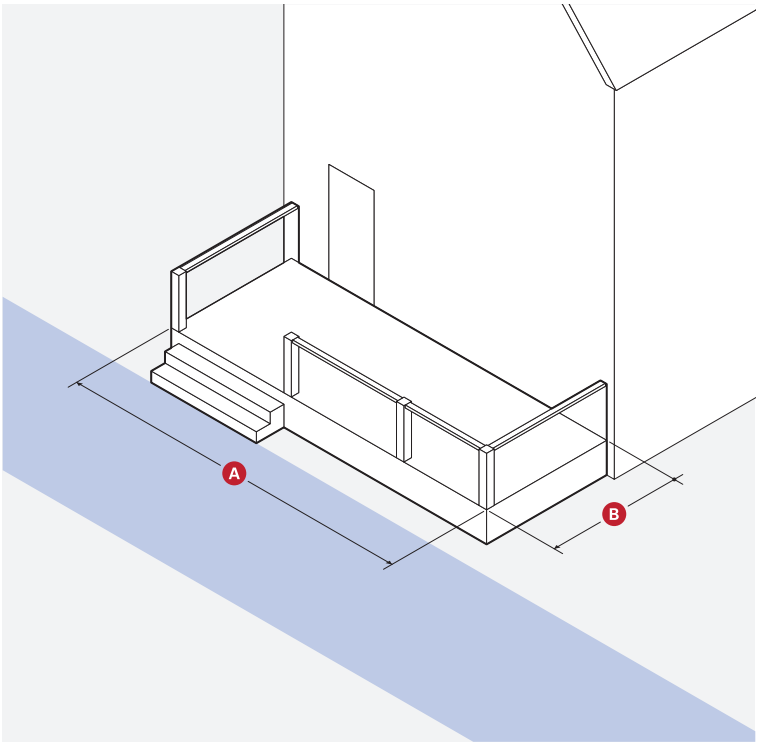

DIMENSIONS		
Width (min)	n/a	
Depth (min/max)	4 feet	10 feet
Furniture Area (min)		

STANDARDS

i. Roof decks should include screening walls or devices at the sides to limit views of abutting properties from elevated vantage points.

7. ROOF DECK

A roofless, raised platform on the roof of a building that provides outdoor amenity space.

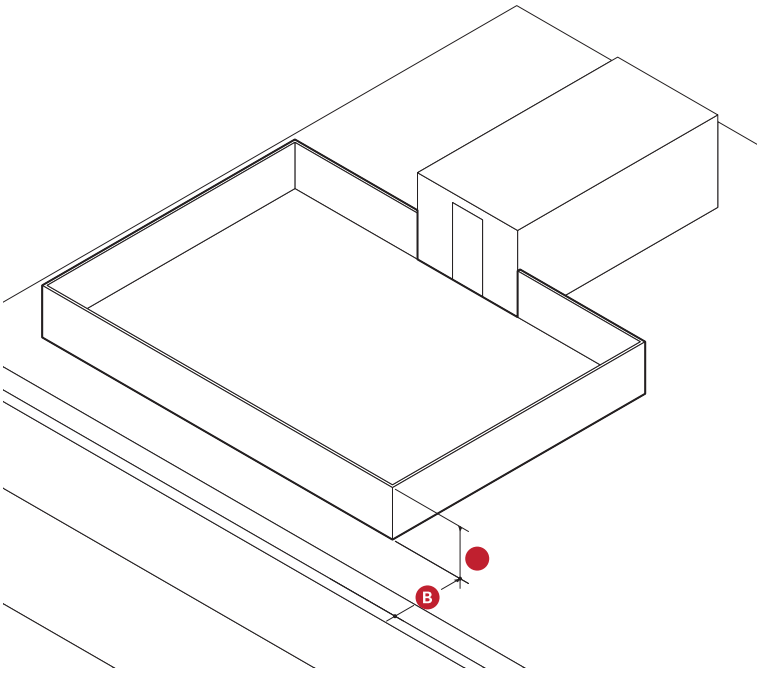

DIMENSIONS	
Setback from Facade (min)	5 feet
Railing Height (max)	4 feet

STANDARDS

i. Roof decks are only permitted on flat roofs.
ii. The flooring of a roof deck must be no more than two feet above the roof supporting the deck.
iii. Roof decks located within five (5) feet of a side rear lot line abutting the NR district must provide sight obscuring visual screening so that it is at least fifty percent (50%) opaque.
iv. Roof deck access structures, such as stairwell penthouses, may not exceed 10 ft. in height and may only serve to enclose the access stairs.

8. DORMER WINDOW

A window or set of windows that projects vertically from a sloped roof, designed to provide light into and expand the habitable space of a half-story.

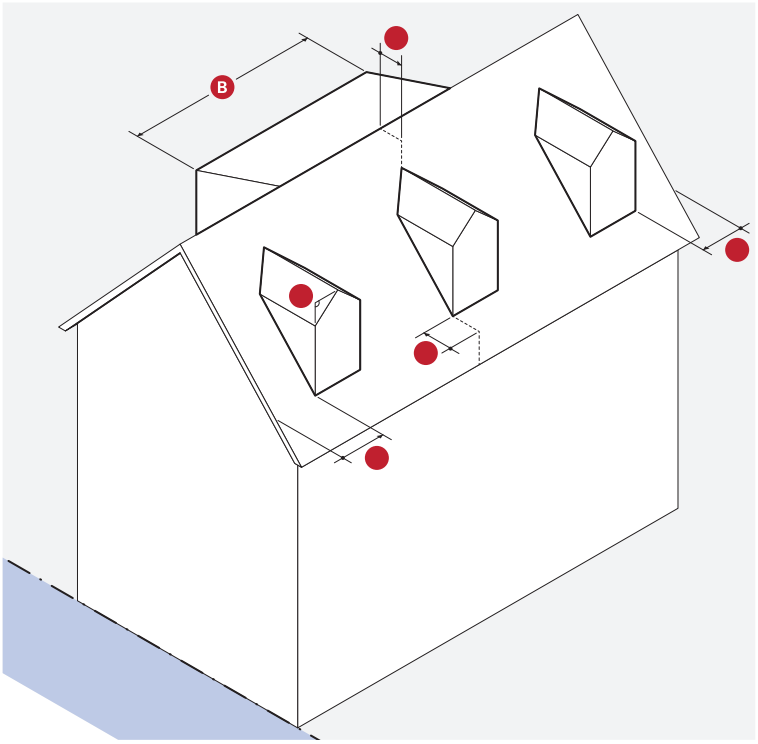

DIMENSIONS	
Width (max)	24 feet or 50% of the eave length of the main roof (whichever is shorter)
Front & Rear Wall Setback (min)	3 ft. 6 in.
Side Wall Setback (min)	1 ft. 6 in.
Ridge Line Setback (min)	1 foot
Roof Slope (min)	4:12
Fenestration (min)	50%

STANDARDS

i. Setbacks are strictly enforced regardless of permitted dormer width.

ii. The maximum permitted width of a dormer applies to single, multiple, or attached combinations of dormers on each side of a roof.

9. CROSS GABLE

A sloped roof that projects perpendicularly from the main roof of a building to significantly increase the habitable space of a half-story.

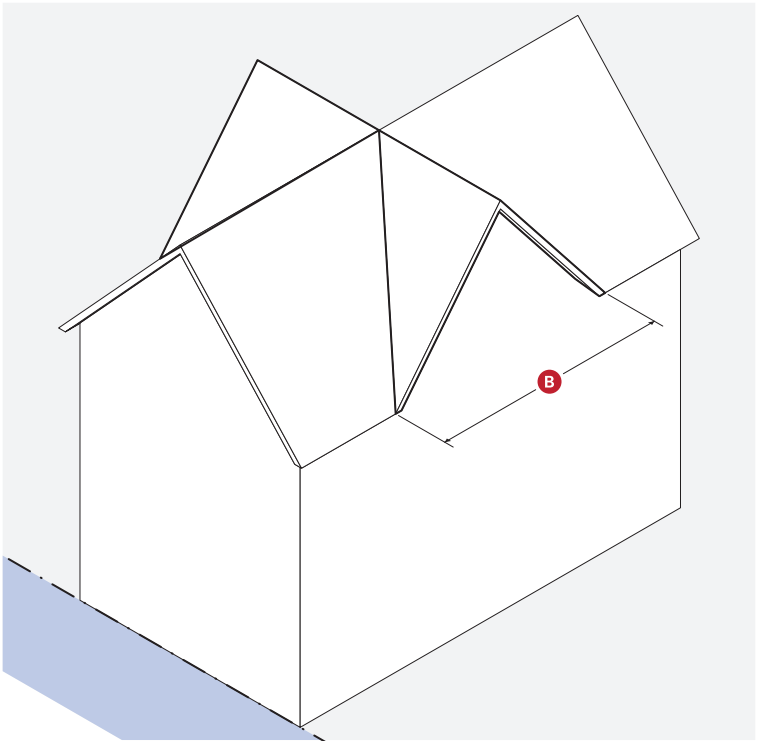

DIMENSIONS	
Width (max)	50% of the eave length of the main roof

STANDARDS

i. The rakes of the cross gable roof must be structurally integrated into the eave of the main roof.

10. SIDE WING

A multi-story extension from one or more side walls of the main body of a building.

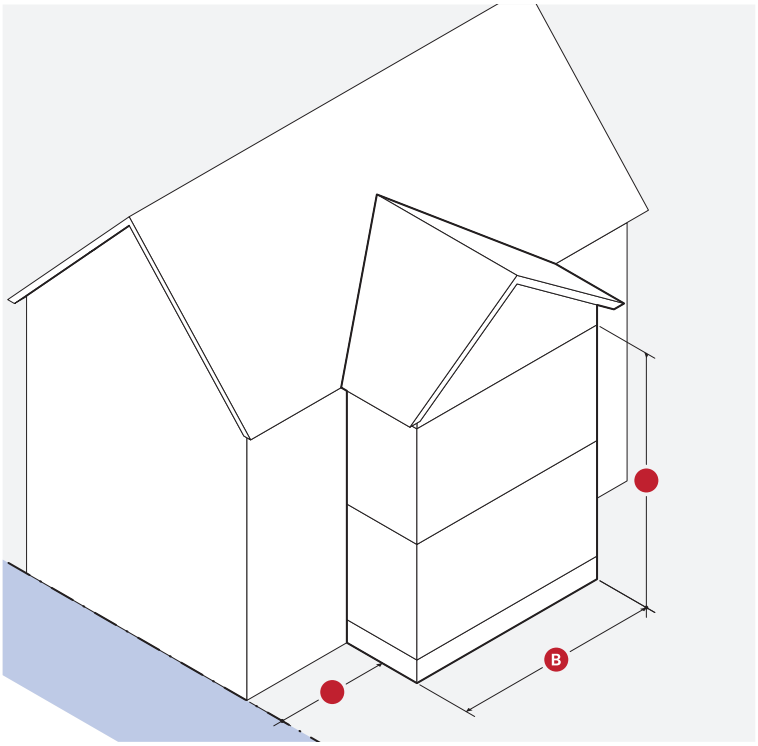

DIMENSIONS	
Setback from Facade (min)	10 feet
Floor Plate Area (max)	50% of the Floor Plate of Principal Building
Width (max)	--
One (1) Story	1/2 of Main Body Width
Two (2) Stories	1/3 of Main Body Width
Height (min)	Same as Principal Building

STANDARDS

i. Side wings must include a similarly style roof as the Principal Building.

11. REAR ADDITION

An extension from the rear wall of the main body of a building.

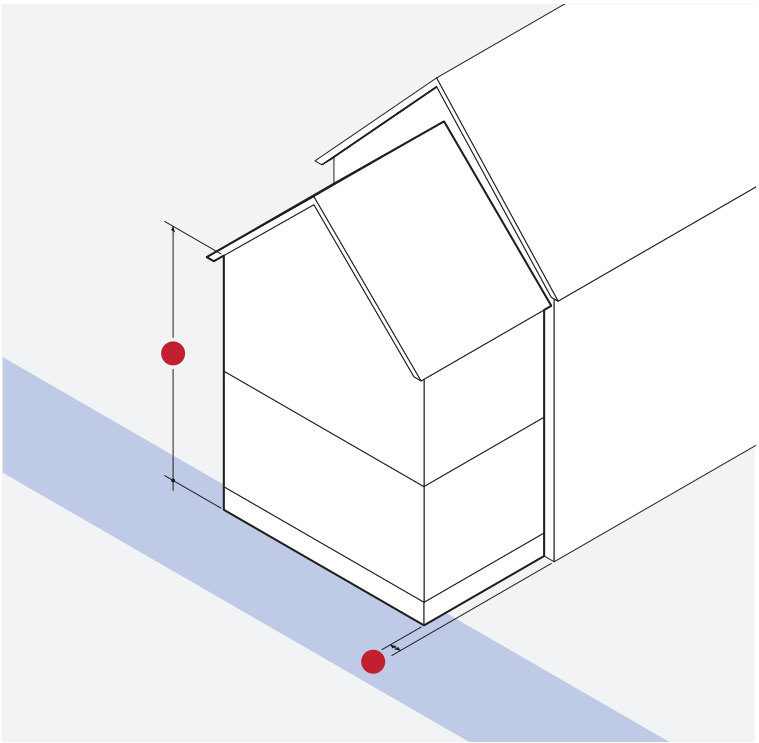

DIMENSIONS	
Setback from side Elevation (min)	1 foot
Floor Plate Area (max)	50% of the Floor Plate of the Principal Building
Height (max)	2 stories

STANDARDS

i. The slope of any pitched roof of a rear addition must be equal to or less than slope of the roof of the main body of the building and no less than nine and one-half degrees (9.5°; 2:12).

E. BUILDING FRONTAGE TYPES

1. GENERAL

a. Building frontage types provide a gradual transition and strong interface between the private realm (yards and building interiors) and the public realm (sidewalks, thoroughfares, and civic spaces) and are permitted according to Table 3.5.

b. At least one (1) building frontage type is required for each principal building.

c. Lots may include multiple frontage types along their width.

TABLE 3.5 Permitted Building Frontage

Y - Permitted
N - NOT Permitted

	Cottage	House	Paired House	Duplex	Triple Decker	Paired Triple Decker	Four-Plex	Six-Plex	Apartment House	Apartment Building	Row Houses	Shop House	Neighborhood Store	Mixed-Use Building	Commercial Building	Production Building	Fabrication Loft	Type Specific Standards
Stoop	Y	Y	Y	Y	Y	Y	Y	Y	Y	Y	Y	N	N	N	N	N	N	§3.E.2. Stoop
Portico	Y	Y	Y	Y	Y	Y	Y	Y	Y	Y	Y	N	N	N	N	N	N	§3.E.3. Portico
Porch, Projecting	Y	Y	Y	Y	Y	Y	Y	Y	Y	N	Y	Y	N	N	N	N	N	§3.E.4. Porch, Projecting
Porch, Engaged	Y	Y	Y	Y	N	N	N	N	N	N	N	Y	N	N	N	N	N	§3.E.5. Porch, Engaged
Door Yard	Y	Y	Y	Y	Y	Y	Y	Y	Y	N	Y	N	N	N	N	N	N	§3.E.6. Door Yard
Forecourt	N	N	N	N	N	N	N	N	N	Y	N	N	N	Y	Y	N	N	§3.E.7. Forecourt
Lobby Entrance	N	N	N	N	N	N	N	N	N	Y	N	Y	N	Y	Y	Y	Y	§3.E.8. Lobby Entrance
Storefront	N	N	N	N	N	N	N	N	N	N	N	Y	Y	Y	Y	Y	Y	§3.E.9. Storefront
Terrace	N	N	N	N	N	N	N	N	N	N	N	N	N	Y	Y	Y	Y	§3.E.10. Terrace
Lightwell	N	N	N	N	N	N	N	N	N	Y	Y	N	N	Y	Y	Y	Y	§3.E.11. Lightwell

2. STOOP

A frontage type featuring set of stairs with a landing leading to the entrance of a building.

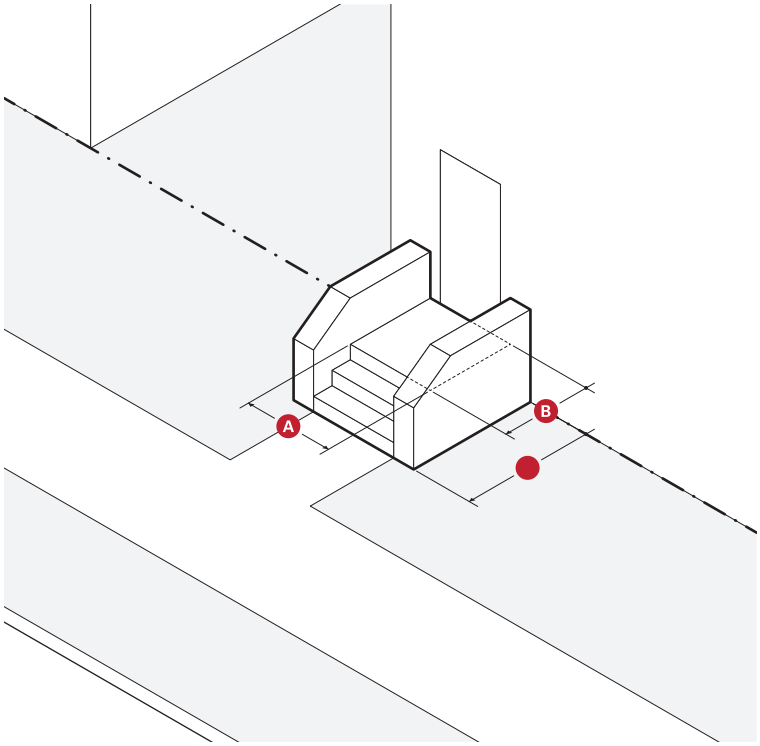

DIMENSIONS	
Landing Width (min)	4 feet
Landing Depth (min)	4 feet
Permitted Encroachment (max)	100% max

STANDARDS

i. Paving, excluding driveways, must match the abutting sidewalk unless paved with pervious, pourous, or permeable materials.
ii. Stairs may be recessed into the building facade when the building is setback four (4) feet or less.
iii. Stairs are not permitted to encroach onto any abutting sidewalk.
iv. Stairs may be built perpendicular or parallel to the building facade, but must lead directly to ground level or an abutting sidewalk.

3. PORTICO

A frontage type featuring a set of stairs with a landing leading to the entrance of a building. A portico has a roof supported by columns or piers.

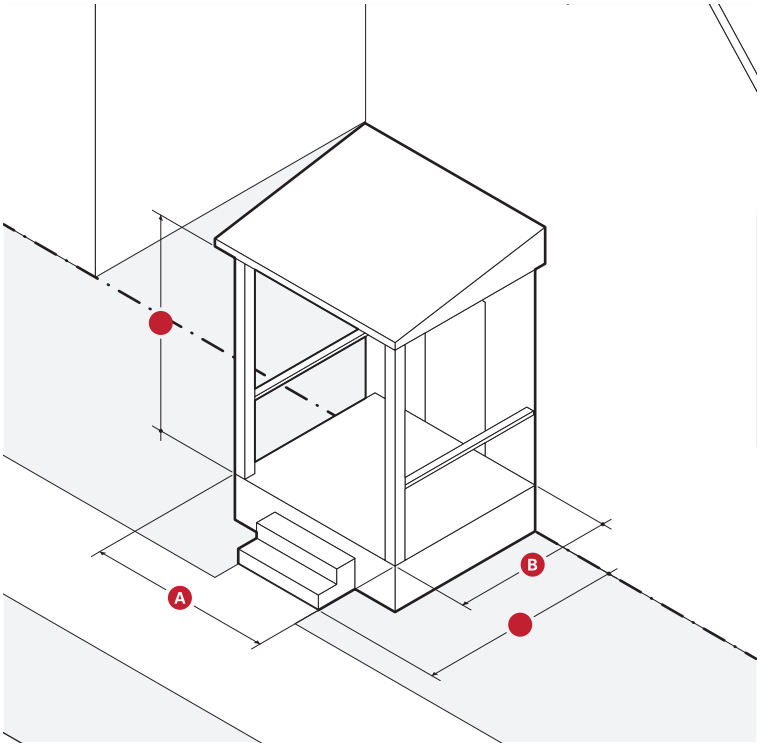

DIMENSIONS	
Landing Width (min)	4 feet
Landing Depth (min)	4 feet
Ceiling Height (min)	8 feet
Permitted Encroachment (max)	100% max

STANDARDS

i. Paving, excluding driveways, must match the abutting sidewalk unless paved with pervious, pourous, or permeable materials.
ii. Stairs are not permitted to encroach onto any abutting sidewalk.
iii. Stairs may be built perpendicular or parallel to the building facade, but must lead directly to ground level or an abutting sidewalk.

4. PORCH, PROJECTING

A frontage type featuring a wide, raised platform with stairs leading to the principal entrance of a building. Porches provide outdoor amenity space and may have multiple levels or a roof supported by columns or piers.

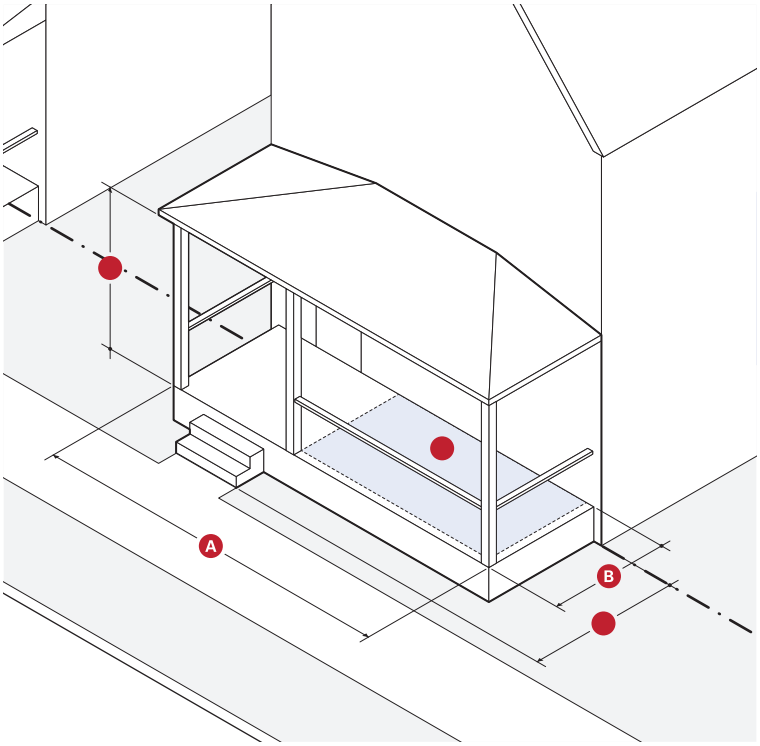

DIMENSIONS

Width (min)	10' or 50% of facade width, whichever is greater
Depth (min)	6 feet
Ceiling Height (min)	8 feet
Furniture Area, Clear (min)	6 feet x 6 feet
Permitted Encroachment (max)	10 feet

STANDARDS

i. Paving, excluding driveways, must match the abutting sidewalk unless paved with pervious, pourous, or permeable materials.
ii. Stairs are not permitted to encroach onto any abutting sidewalk.
iii. Stairs may lead directly to ground level, an abutting sidewalk, or be side-loaded.
iv. The porch balustrade must permit visual supervision of the public realm through the posts and rails.
v. A porch may be screened provided the percentage of window area to wall area is seventy percent (70%) or greater. Permanent enclosure of a porch to create year-round living space is not permitted.

5. PORCH, ENGAGED

A frontage type featuring a raised platform with stairs leading to the principal entrance of a building. Engaged porches are attached to the building at two sides, one to the facade and the other to a permitted encroachment (typically a mud room).

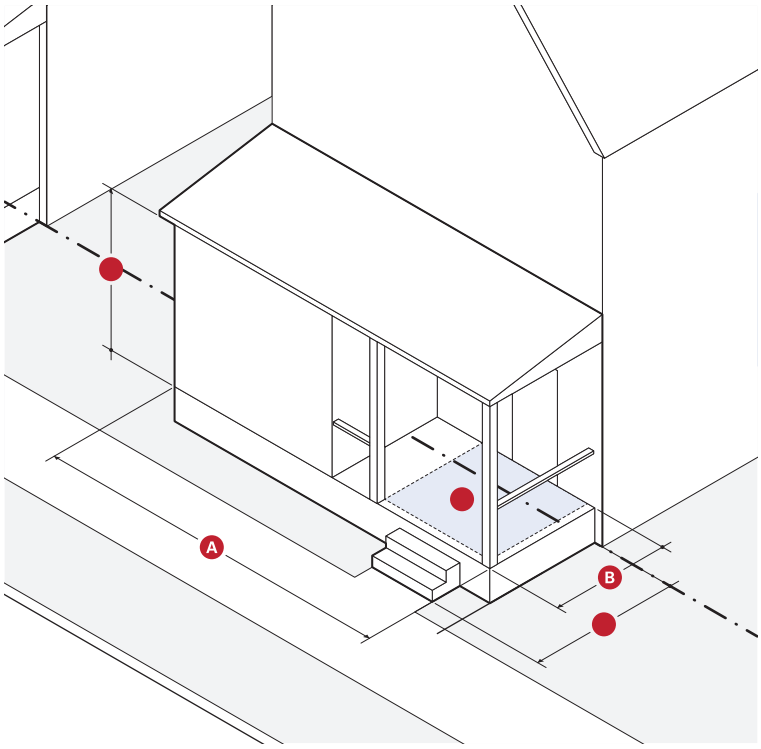

DIMENSIONS

Width (min)	9 feet
Depth (min)	6 feet
Ceiling Height (min)	8 feet
Furniture Area, Clear (min)	6 feet x 6 feet
Permitted Encroachment (max)	10 feet

STANDARDS

i. Paving, excluding driveways, must match the abutting sidewalk unless paved with pervious, pourous, or permeable materials.
ii. Stairs are not permitted to encroach onto any abutting sidewalk.
iii. Stairs may lead directly to ground level, an abutting sidewalk, or be side-loaded.
iv. The porch balustrade must permit visual supervision of the public realm through the posts and rails
v. A porch may be screened provided the percentage of window area to wall area is seventy percent (70%) or greater. Permanent enclosure of a porch to create year-round living space is not permitted.

6. DOORYARD

A frontage type featuring fenced or elevated gardens or patios that buffer dwellings from an adjacent sidewalk. Dooryards are an appropriate frontage type for a zero-step, accessible entrance, but may include steps leading to the entrance of the building.

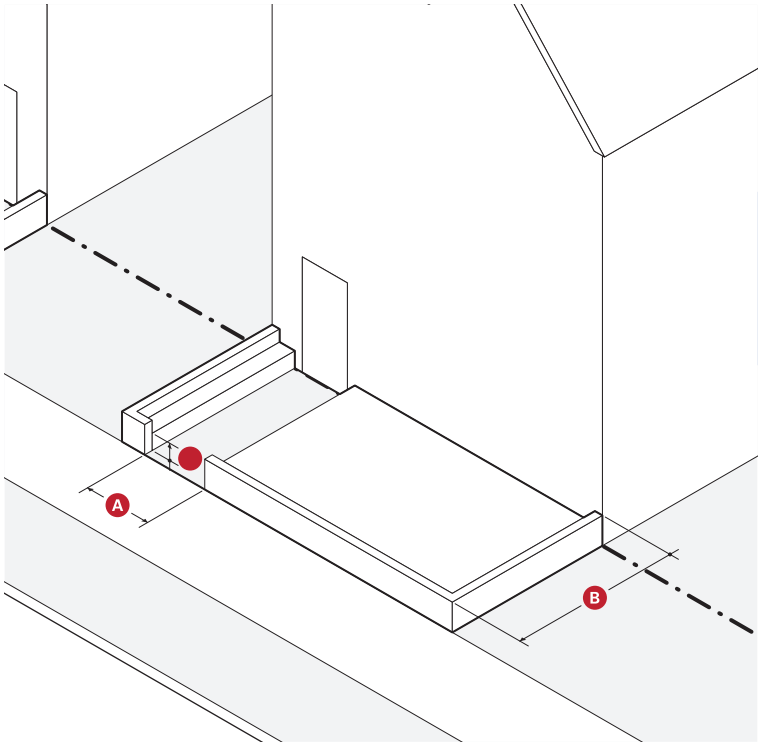

DIMENSIONS	
Landscaped Area	--
Elevation above Sidewalk (min)	12 in.
Depth (min)	8 feet
Path of Travel (min)	3 ft. wide

STANDARDS

i. Paving, excluding driveways, must match the abutting sidewalk unless paved with pervious, pourous, or permeable materials.
ii. A curb or retaining wall that is no taller than structurally necessary may be built around the plater, garden, terrace, or otherwise landscaped area.
iii. Circulation between adjacent dooryards is prohibited.

7. FORECOURT

A frontage type featuring a landscaped semi-public area, open to the sky, formed by a recess in a central portion of a buildings facade.

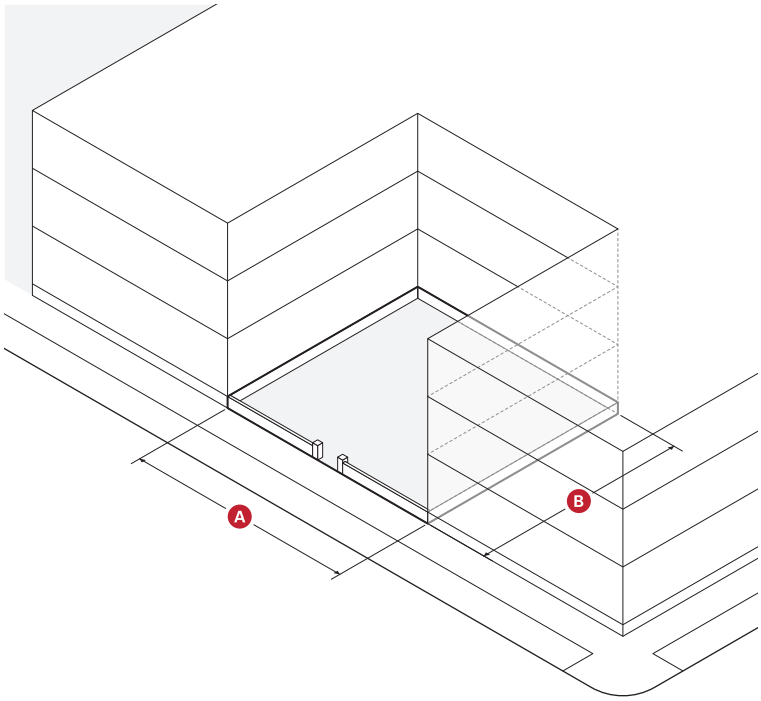

DIMENSIONS	
Width (min)	12 feet
Depth (min)	12 feet
Height to Width Ratio (max)	2 to 1
Landscaped Area (min)	30%

STANDARDS

i. Paving, excluding driveways, must match the abutting sidewalk unless paved with pervious, pourous, or permeable materials.
ii. Forecourts are considered part of the building for the purpose of measuring facade buildout.
iii. A forecourt must be enclosed by walls on three sides.
iv. Porches, stoops, porticos, entry canopies, and balconies may encroach into the forecourt.
v. Driveways, parking spaces, passenger drop-offs, garage entrances, loading and service areas, exhaust vents, mechanical equipment, and refuse or recycling storage are not permitted in forecourts.

8. LOBBY ENTRANCE

A frontage type featuring an at-grade principal entrance providing access to upper story uses of a building.

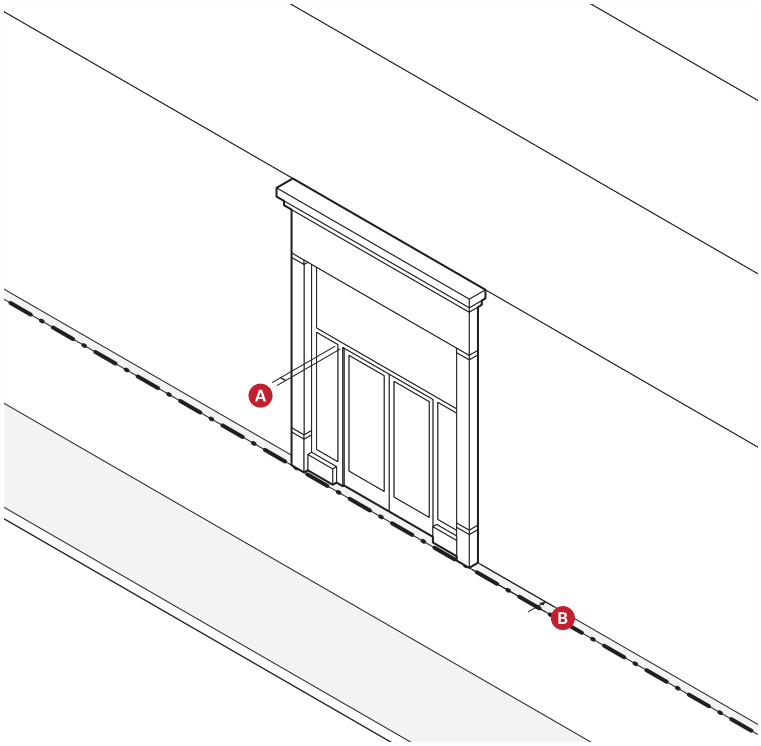

DIMENSIONS	
Distance between Fenestration (max)	2 feet
Depth of Recessed Entry (max)	5 feet

STANDARDS

i. Lobby entrances must be well-defined, clearly visible, and universally accessible from the abutting sidewalk.
ii. When a lobby entrance is setback from the front lot line, the frontage must be paved to match the abutting sidewalk.
iii. Lobby entrances should be made clearly identifiable using a difference in design from the rest of the facade.
iv. Lobby entrances should include weather protection.

9. STOREFRONT

A frontage type conventional for commercial uses featuring an at grade principal entrance accessing an individual ground story space and substantial display windows for the display of goods, services, and signs.

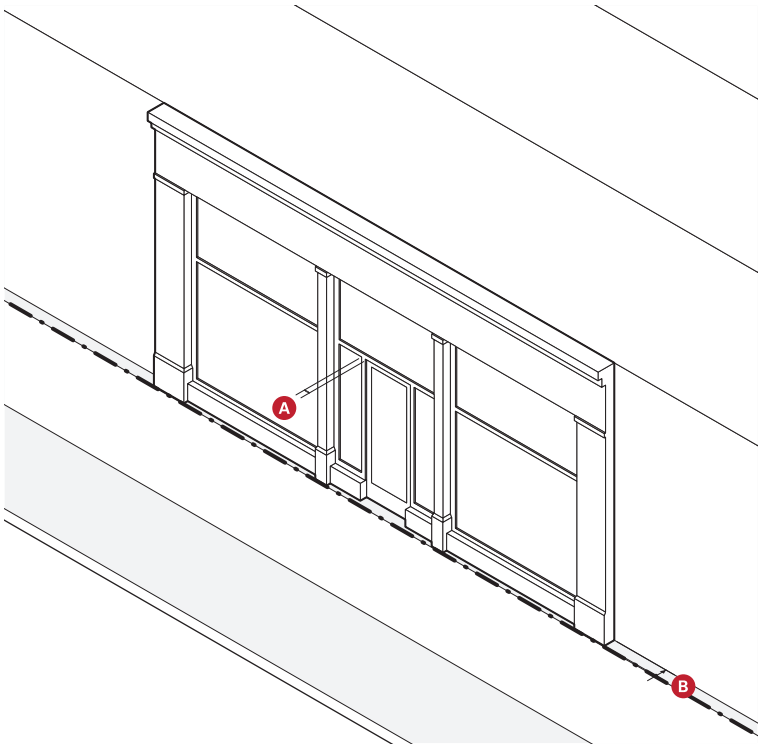

DIMENSIONS	
Distance between Fenestration (max)	2 feet
Depth of Recessed Entry (max)	5 feet

STANDARDS

i. When storefronts are setback from the front lot line, the frontage must be paved to match the abutting sidewalk.
ii. Open ended, operable awnings are encouraged for weather protection.
iii. Bi-fold glass windows and doors and other storefront systems that open to permit a flow of customers between interior and exterior space are encouraged.

10. TERRACE

A frontage type featuring an elevation of the ground level to accommodate a change in grade that provides circulation and access along the front of a building.

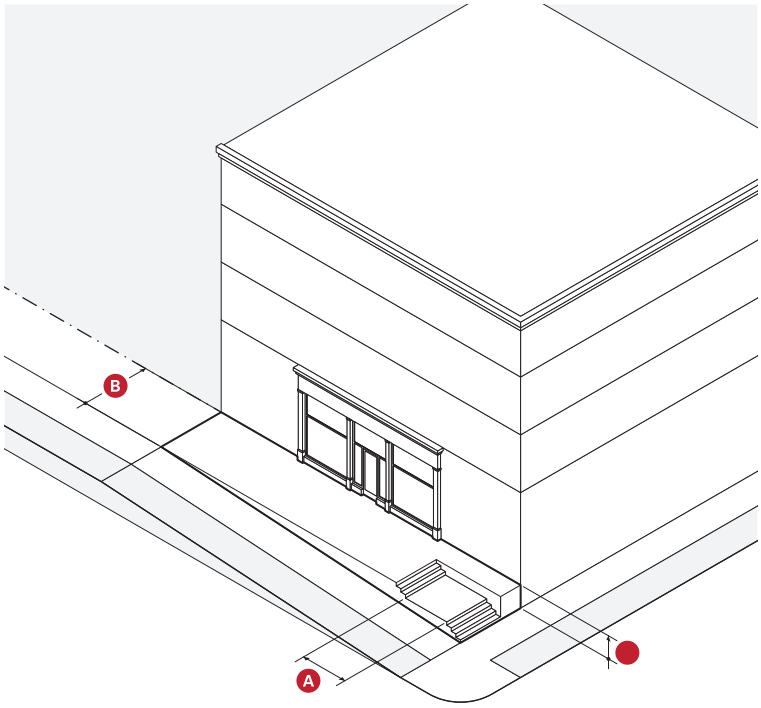

DIMENSIONS

Depth (min)	8 feet	
Finish above Sidewalk (min, max)	18 inches	4 feet
Distance between Stairs (max)	50 feet	

STANDARDS

i. Terrace frontage must be paved to match the abutting sidewalk.
ii. Frequent steps up to the terrace are required to avoid blank wall along the sidewalk an maximize pedestrian access.

11. LIGHTWELL

A frontage type where the ground level is sunken to allow light and sometimes access into basement levels or to accommodate a change in grade at the front of a building.

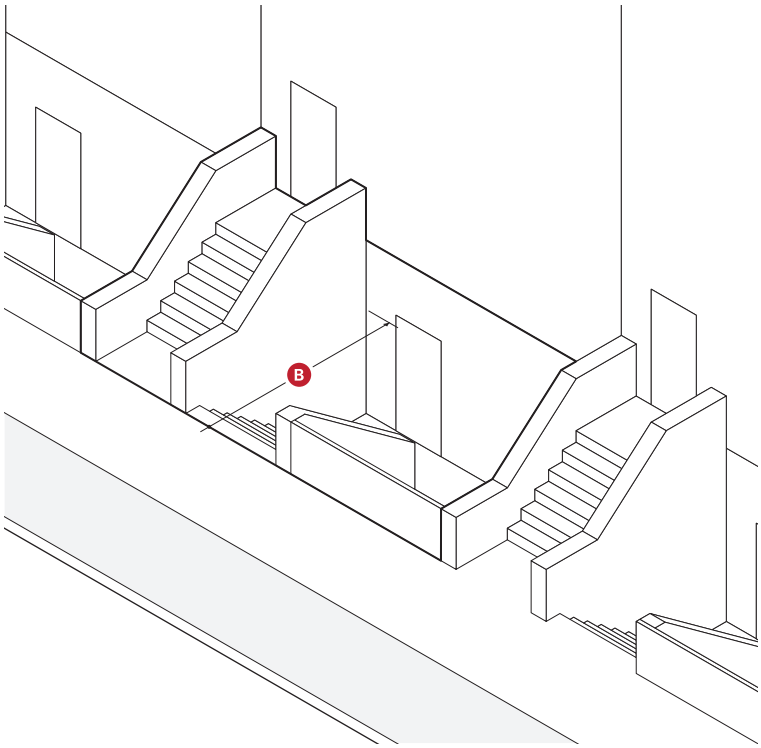

DIMENSIONS

Depth (min)	5 feet
Fenestration	
Residential Uses (min)	20% min.
Commercial Uses (min)	50% min.

STANDARDS

i. The principal entrance to upper stories must be provided at the ground story, rather than the basement.
ii. An entrance to the basement is permitted on the below grade portion of the facade.
iii. Below grade spaces are required to have windows and doors with highly transparent, low reflectivity glass.
iv. A short fence is required at the front the sunken portion of the lot.

F. OUTDOOR AMENITY SPACE

1. GENERAL

a. At least one (1) outdoor amenity space is required for each dwelling unit.
b. Outdoor amenity spaces are permitted for each building type according to Table 3.6.
c. Each outdoor amenity space must provide at least twenty-four (24) square feet of unobstructed seating area.
d. Apartment building and mixed-use building types may provide shared outdoor amenity space, provided that the space includes the total seating area required for each unit that the shared space is meant to serve.
    i. Outdoor amenity space required for dwelling units above the tenth (10th) story must be provided as shared amenity space.
e. For all other building types, each outdoor amenity space must be directly accessible by a doorway from a habitable room within the dwelling unit it is meant to serve.

TABLE 3.6 Permitted Amenity Spaces

Y - Permitted
N - NOT Permitted

	Cottage	House	Paired House	Duplex	Triple Decker	Paired Triple Decker	Four-Plex	Six-Plex	Apartment House	Apartment Building	Row Houses	Shop House	Neighborhood Store	Mixed-Use Building	Commercial Building	Production Building	Fabrication Loft	Type Specific Standards
Balcony	Y	Y	Y	Y	Y	Y	Y	Y	Y	Y	Y	Y	n/a	Y	n/a	n/a	n/a	§3.D.5. Balcony
Deck	Y	Y	Y	Y	N	N	Y	Y	N	N	Y	Y	n/a	N	n/a	n/a	n/a	§3.D.6. Deck
Patio	Y	Y	Y	Y	Y	Y	Y	Y	Y	N	Y	Y	n/a	N	n/a	n/a	n/a	n/a
Porch	Y	Y	Y	Y	Y	Y	Y	Y	N	N	Y	Y	n/a	N	n/a	n/a	n/a	§3.E.4 & §3.E.5
Roof Deck / Roof Terrace	N	N	N	N	Y	Y	Y	Y	N	Y	Y	Y	n/a	Y	n/a	n/a	n/a	§3.D.7. Roof Deck
Yard	Y	Y	Y	Y	Y	Y	Y	Y	Y	N	Y	Y	n/a	N	n/a	n/a	n/a	n/a

G. BUILDING DESIGN

1. PURPOSE

a. To encourage design techniques that address privacy concerns in a densely built urban environment.
b. To ensure energy saving building features are properly designed and appropriately installed; to encourage the passive cooling of interior spaces and reduce the need for electrical air conditioning; to protect circadian rhythms and enhance the happiness and productivity of building occupants by visually connecting them with the outdoors and introducing natural daylight into interior spaces; and to minimize heat island impacts on the urban environment.
c. To ensure building facades are divided and articulated into pedestrian-scaled increments.
d. To require vertical articulation and modulation of facades that breaks down and visually minimizes the apparent mass of buildings, enhances orientation, and adds visual interest to the public realm.
e. To require horizontal articulation of facades that enhances the quality and definition of the public realm, visually anchors buildings to the ground, and relates the building to the pedestrian, at the base, to the immediate context of surrounding buildings, at the middle, and completes the composition of facade, at the top, with visual interest.
f. To ensure storefront design that invites interaction, enlivens the pedestrian environment, and provides a secondary, more intimate, source of lighting at night.
g. To ensure that review results in visual harmony between the individual elements of a building.

2. BUILDING PRIVACY

a. Ground Story Elevation
   i. Ground story dwelling units should be elevated above the grade of any adjacent sidewalk so that the window sills of dwelling unit are at or above the eye-level of passing pedestrians. This elevation change maintains privacy for occupants while also encouraging open blinds or curtains to allow natural daylight into the unit.
b. Windows
   i. Fenestration patterns and window configurations that break the direct line of sight between neighboring properties should be utilized to every extent possible. Translucent glass on the bottom half of windows or strategically placed landscape elements should be utilized if it is not practical to off-set windows in ways that minimize privacy impacts.
c. Outdoor Amenity Spaces
   i. Outdoor amenity spaces that are elevated such as roof decks, fully projecting balconies, and upper story rear porches should include screening walls or devices at the sides to provide privacy, security, and limit views of abutting properties from elevated vantage points.

3. ENERGY EFFICIENCY

a. Shutters
   i. If installed, shutters must be functional, sized to provide complete coverage of the window when closed, and include appropriate hardware to keep them secured when open or closed.
b. Windows
   i. At least fifty percent (50%) of the windows of each floor of a building and serving each dwelling unit must be operable.
   ii. Operable windows should be oriented toward prevailing winds to every extent possible and support the creation of cross breezes that can assist in the passive cooling of interior spaces.
   iii. All south facing windows should be recessed or shaded by deciduous trees, awnings, canopies, or interior or exterior light shelves.
c. Daylight and Views
   i. The following apply to portions of mixed-use buildings in non-residential use:
      a). A minimum of fifty-five percent (55%) of the floor area of all regularly occupied interior spaces must receive sufficient daylight equal to a spatial daylight autonomy of three hundred (300) lux or more for at least fifty percent (50%) of the time.
      b). No more than ten percent (10%) of the floor area of all regularly occupied interior spaces may receive direct sunlight, which can result in visual discomfort and increased cooling loads, equal to an annual solar exposure exceeding one thousand (1000) lux for more than two-hundred and fifty (250) hours per year.
      c). A direct line of sight to the outdoors is required for at least seventy-five percent (75%) of the floor area of all regularly occupied interior spaces.
d. Roof Albedo
   i. Flat roofs and roofs pitched at or below nine and one-half degrees (9.5°; 2:12) must have a minimum solar reflectance index rating of seventy-eight (78) for a minimum of seventy-five percent (75%) of the roof surface.
   ii. Roofs pitched above nine and one-half degrees (9.5°; 2:12) must have a minimum solar reflectance index rating of twenty-nine (29) for a minimum of seventy-five percent (75%) of the roof surface.

4. FACADE ARTICULATION

a. Building facades must provide surface relief through the use of bay windows, cladding, columns, corner boards, cornices, door surrounds, moldings, piers, pilasters, sills, sign bands, windows, and other equivalent architectural features that either recess or project from the average plane of the facade by at least four (4) inches.
b. Building FACADES must be vertically articulated with architectural bays between six (6) feet and fifty (50) feet in width to create an equal, central, and/or ends focused composition as illustrated in Figure 3.1.
c. Buildings greater than one hundred (100) feet in width must be designed to read as a series of smaller buildings with varied architectural design and fenestration patterns or include a change in vertical plane of the facade of at least four (4) feet (in depth or projection) for at least one (1) bay in width for every one-hundred feet of total

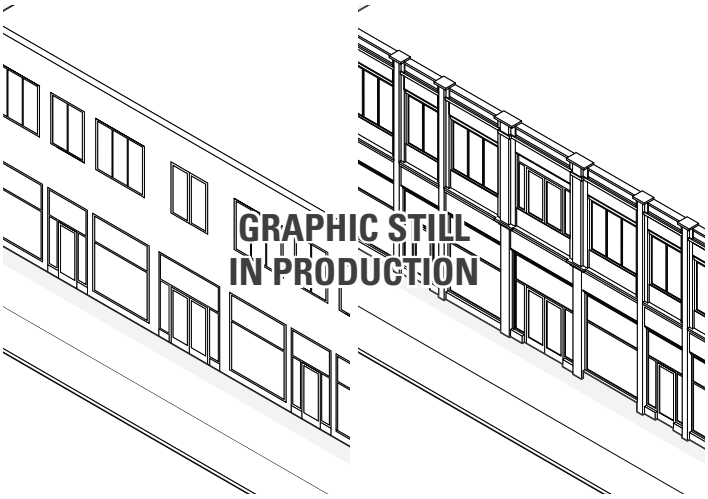

facade width. This change in plane applies to the entire height of the facade.

d. Building facades must be horizontally articulated with a clearly defined base, middle, and top as illustrated in Figure 3.2. The following standards apply:
   i. Buildings or portions of buildings (distinct massing elements) three (3) stories or less:
      a). The raised foundation, basement, or first story of a building must be must be visually integrated as an expression of the buildings base. The base must be visually differentiated from the stories above by a horizontal expression line or cornice and include a change in color, building material, or pattern of fenestration.
      b). The upper stories of a building must be visually integrated as an expression of the building's middle. The middle must be visually differentiated from the base and top and include a change in color, building material, or pattern of FENESTRATION.
      c). The top story of a building must have a cornice, parapet, or roof as an expression of the buildings top.
   ii. Buildings or portions of buildings (distinct massing elements) four (4) stories or less:
      a). The bottom one to two stories of a BUILDING must be visually integrated as an appropriately scaled expression of the building's base. The base must be visually differentiated from the stories above by a horizontal expression line or cornice and include a change in color, building material, or pattern of FENESTRATION.
      b). The central portion of each FACADE must be visually integrated as an expression of the building's middle. The middle must be visually differentiated from the base and top by a horizontal expression line or cornice and include a change in color, building material, or pattern of FENESTRATION.
      c). The top story of each FACADE shall have a cornice, parapet, roof element, or change in massing as an expression of the building's top.
   iii. Buildings or portions of buildings (distinct massing elements) five (5) stories or more:
      a). The bottom one to three stories of a building must be visually integrated as an appropriately scaled expression of the building's base. The

FIGURE 3.1 Vertical Articulation Examples

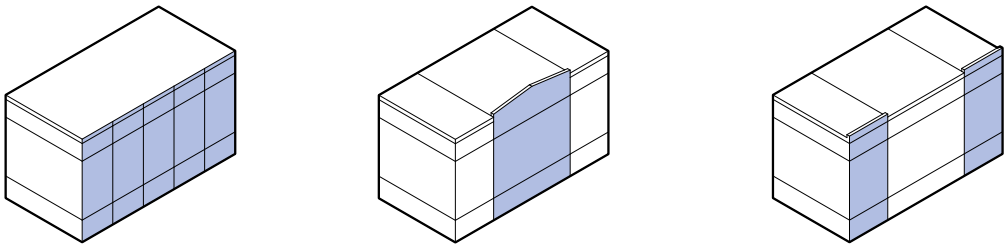

Equal Ends

FIGURE 3.2 Horizontal Articulation Examples

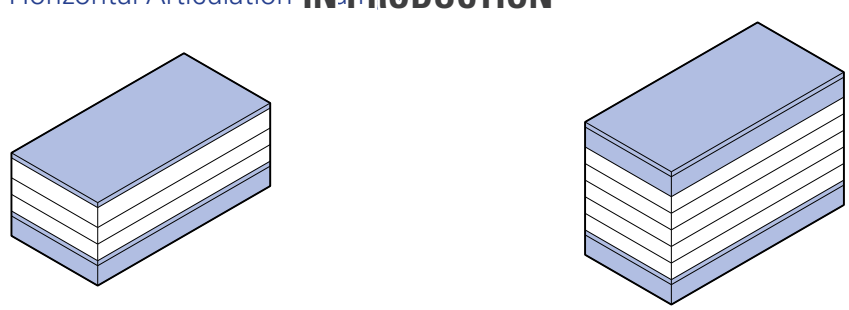

4 Stories or Less 5 Stories or More

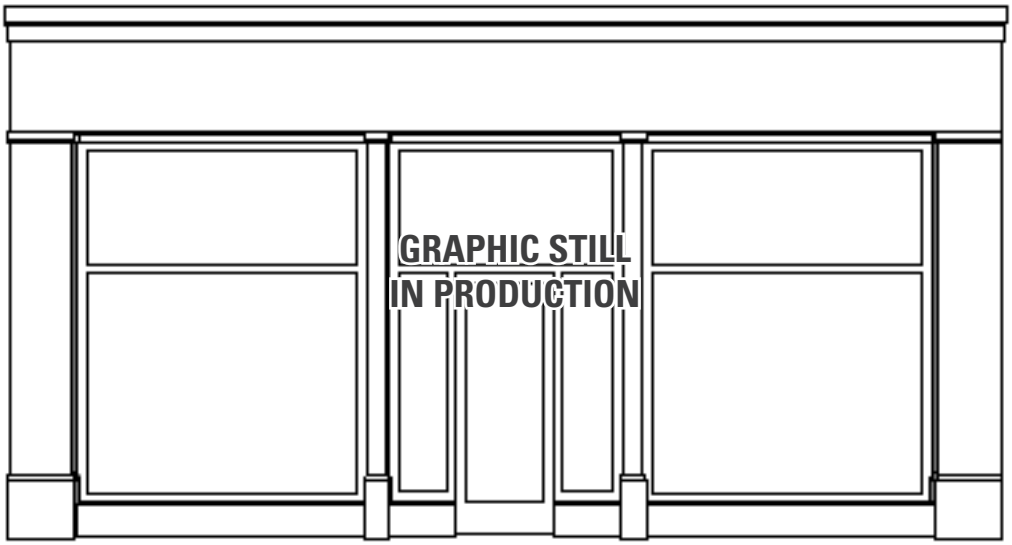

base must be visually differentiated from the stories above by a horizontal expression line or cornice and include a change in color, building material, or pattern of FENESTRATION.

b). The central portion of each FACADE must be visually integrated as an expression of the building's middle. The middle must be visually differentiated from the base and top by a by a horizontal expression line or cornice and include a change in color, building material, or pattern of FENESTRATION.

c). The top one to three stories of each FACADE must be visually integrated as an appropriately scaled expression of the building's top. The top must be visually differentiated from the stories below by a horizontal expression line or cornice; shall include a change in color, building material, or pattern of FENESTRATION; and shall have a cornice, parapet, roof element, or change in massing to cap the composition.

iv. Materials appearing heavier in weight should be used for the buildings base, with materials appearing similar or lighter in weight used above.

v. Materials lighter in color, tint, or shade should be used for the buildings base, with materials similar or darker in color, tint, or shade used above.

e. Each horizontal element of a building (base, middle, and top) must have a FENESTRATION pattern that is aligned vertically and horizontally to provide order and structure to the composition. The FENESTRATION pattern may differ between the base, middle, and top.

5. STOREFRONTS

a. Storefronts must be designed to include, at minimum, a paneled or rendered stallriser and display windows positioned between columns, pilasters, or piers with a proportional fascia or frieze and cornice capping the storefront as illustrated in Figure X. Elements of a Storefront.

i. Display windows must extend to at least eight (8) feet above the grade of the adjacent sidewalk.

ii. The stallriser must be at least one (1) foot in height.

iii. The principal entrance of a storefront must be a glass panel door centered between or set to one side of the display windows.

b. Storefront entrances may be recessed up to five (5) feet behind the plane of the facade as illustrated in Figure X. Recessed Entrance Examples provided that the recessed area is no wider than fifteen (15) feet per individual entry.

c. Where height permits, transom windows should be included above storefront doors and display windows to allow natural daylight to penetrate into the interior space.

d. When present, awnings and canopies must be mounted between storefront columns, pilasters, or piers; above doorway and window openings; and below the fascia/ frieze and transom window bars.

e. An unobstructed view of the ground story interior space or maintained and lighted merchandise display(s) must be provided for a depth of at least four (4) feet behind the glass of storefront display windows.

f. Security grills, gates, and roll-down security doors and windows are prohibited.

g. Vents, ducts, permanent air conditioners, and other utility elements are prohibited on building facades.

h. If present, drainage systems must be architecturally integrated into the design of the building facade.

6. STEP-BACKS

a. The upper stories of any building in the 7MU or 10MU district exceeding five (5) stories in height must step-back at least ten (10) feet from the minimum front setback at either the 3rd, 4th, or 5th story as illustrated in Figure X. See §3.H. Design Review for additional information.

7. HIGH-RISE BUILDINGS

a. Towers

i. To provide appropriate privacy and level of natural light into buildings, the separation distance between all TOWERS must be at least eighty (80) feet, measured from the exterior walls and excluding balconies.

ii. The separation distance between TOWERS may be

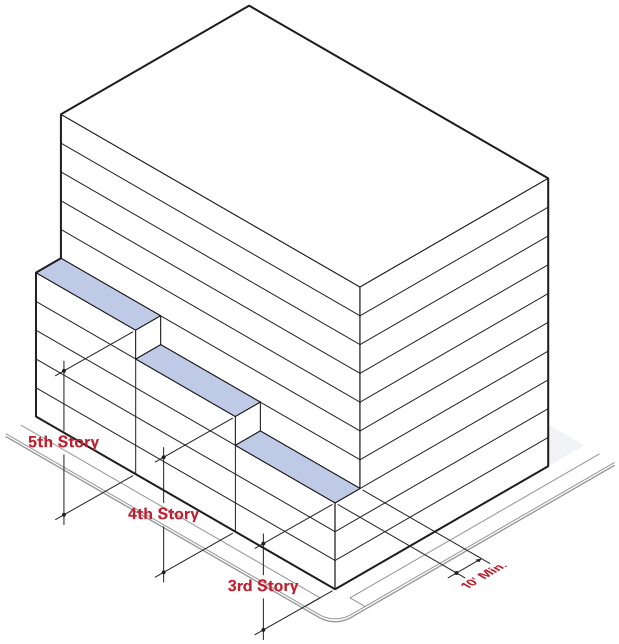

decreased to a minimum of fifty (50) feet by Special Permit through the use of creative architectural solutions such as offset TOWERS/views, non-parallel walls, or tapering/curved TOWER forms, that increase the actual or perceived TOWER separation distance, provided that both privacy and natural light are provided and no adverse environmental conditions are created.

a). In its discretion to approve or deny a special permit authorizing a decrease in the separation of tower below the standard eighty (80) foot minimum, the designated review board shall consider the following:

i). Shadow impacts cast on adjacent sites and on-site uses.

ii). View corridors from windows of new and existing towers.

iii). Effectiveness of architectural techniques to increase the actual or perceived tower separation distance.

b. Environmental Performance

i. Shadows cast by high-rise buildings may not adversely limit at grade access to sunlight on sidewalks and civic and recreation spaces.

ii. Pedestrian level wind velocities may not exceed acceptable levels for various activities existing or proposed at particular locations.

iii. Buildings may not cause visual impairment or discomfort due to reflective spot glare and/or solar heat buildup in any nearby buildings.

iv. Emissions from any parking facility and/or the heating and mechanical systems of any buildings shall not violate any state or federal ambient air quality standards.

H. DESIGN REVIEW

1. REVIEW CONSIDERATIONS

a. In providing design guidance to Applicants that is required by the Ordinance or upon request by a review board, the Urban Design Commission shall provide recommendations for the following:

i. All Building Types

a). Location and functionality of all entrances.

b). Visibility and integration of mechanical and utility equipment into the architectural design of the building.

c). The quality and durability of building materials.

d). Architectural techniques to comply with the provisions of §3.G.4. Facade Articulation.

ii. Storefronts

a). Design and composition of the elements of a storefront.

iii. Development in Mixed-Use Districts

a). The horizontal extension of roof lines and cornice lines from one facade to another to provide continuity to the street wall and reinforce the spatial definition of the street.

b). For mixed-use buildings in the 3MU, and 4MU districts, the direction of attention toward the principal entrances of ground story uses rather than the principal entrances of residential uses on upper stories.

c). Proportional relationships between the architectural elements of a facade and their use in the development of the facade's composition and details.

d). The use of materials so that during the day, the design of a facade anchors the base of a building to the ground and at night, the design of a facade helps to blend the upper stories of a building into the night sky.

iv. Step-Backs

a). The step-back of a building's facade at either the 3rd, 4th, or 5th story to reinforce the street wall and provide a spatial definition to the street space that is human scaled.

v. High Rise Buildings

a). Location, alignment, and massing techniques to mitigate shadow impacts cast on adjacent sites and on-site uses.

b). Location, alignment, and massing techniques to address impacts on view corridors from the windows of new and existing towers.

c). Architectural design techniques to increase the actual or perceived separation distance between towers.

ARTICLE 4: SPECIAL DISTRICTS

ASSEMBLY SQUARE (ASQ-SD) 93
- Intent 93
- Purpose 93
- Applicability 93
- Previously Approved Plans 93
- Development Planning 94
- Public Realm Standards 94
- Building Provisions 94
- Use Provisions 95
- Parking Design Standards &Guidelines 100
- General Development Provisions 100
- Development Review 101

BRICKBOTTOM (BB-SD) 103
- Intent 103
- Purpose 103
- Applicability 103
- Development Planning 104
- Public Realm Standards 104
- Building Standards 104
- Principal Building Types 105
- Use Provisions 113
- DEVELOPMENT REVIEW 113

GRAND JUNCTION (GJ-SD) 117
- Intent 117
- Purpose 117
- Applicability 117
- Development Planning 118
- Public Realm Standards 118
- Building Standards 118
- Principal Building Types 119
- Use Provisions 123
- Development Review 123

INNER BELT (IB-SD) 127
- Intent 127
- Purpose 127
- Applicability 127
- Development Planning 128
- Public Realm Standards 128
- Building Standards 128
- Principal Building Types 129
- Use Provisions 133
- Development Review 133

NORTH POINT (NP-SD) 137
- Intent 137
- Purpose 137
- Applicability 137
- Development Planning 138
- Public Realm Standards 138
- Principal Building Types 139
- Use Provisions 145
- Parking and Loading 146
- Development Review 147

TUFTS UNIVERSITY (TU-SD) 149
- Intent 149
- Purpose 149
- Applicability 149
- Lots 149
- Dimensional Requirements 149
- Use provisions 151
- Motor Vehicle Access & Parking 152
- Development review 153

FLOODPLAIN OVERLAY (FO-SD) 155
- Purpose 155
- Applicability 155
- Definitions 155
- Compliance with Regulations 155
- District Regulations 156
- Notification of Watercourse Alteration 156

A. ASSEMBLY SQUARE (ASQ-SD)

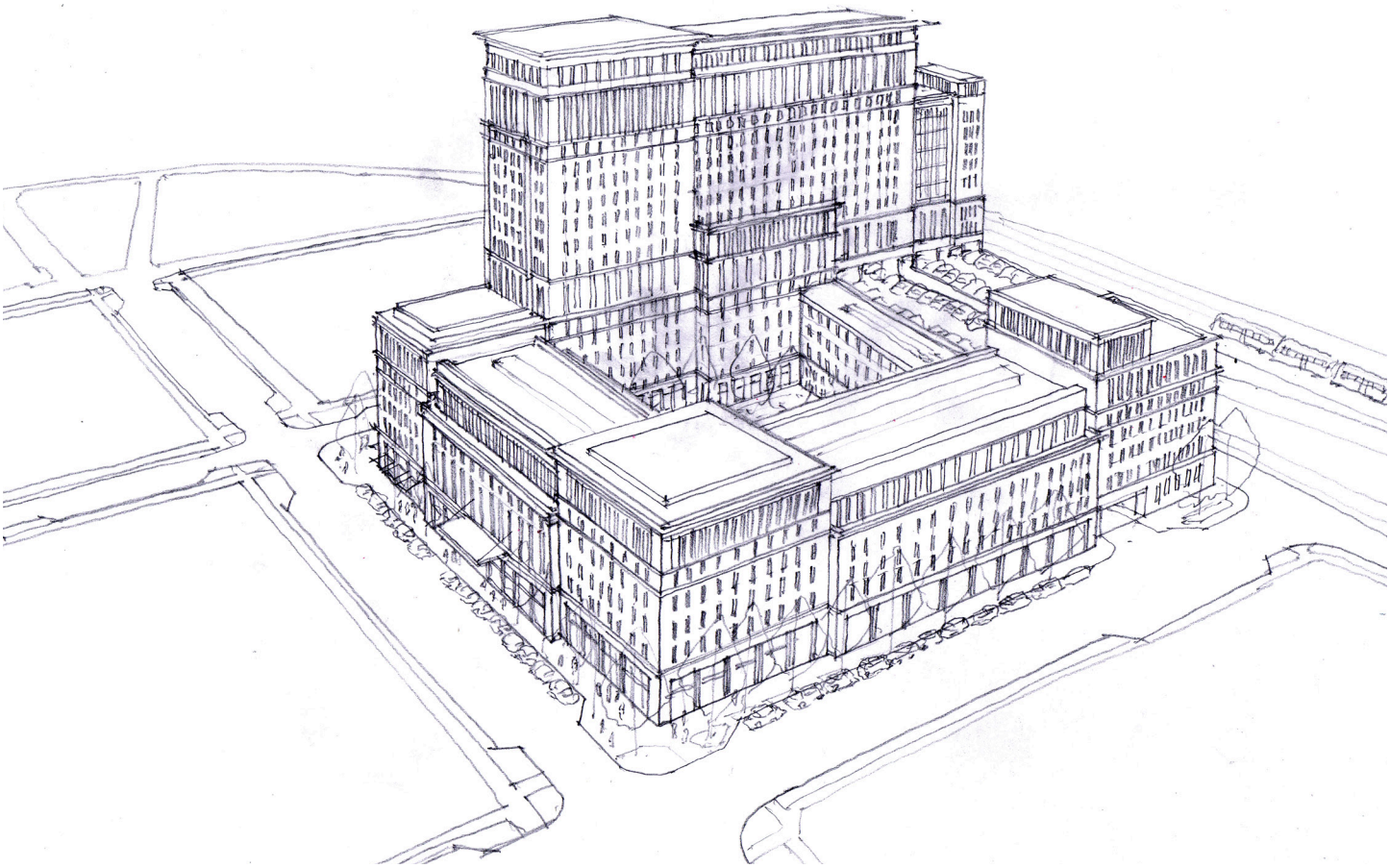

1. INTENT

a. To accommodate a neighborhood of mixed-use, high-density, transit-oriented development with the following characteristics:
   i. An diverse mix of uses including residential, office, research and development, retail, lodging, entertainment, performing arts, and institutional uses;
   ii. Commercial activities that create new employment opportunities at a variety of income and skill levels;
   iii. An urban scale thoroughfare network and block size conducive to a walkable neighborhood;
   iv. Improved utility infrastructure, thoroughfares, and off-street pedestrian and bicycle paths;
   v. Appealing physical connections to surrounding areas including East Somerville, Ten Hills, and Sullivan Square.
   vi. A distribution of diverse civic space types to serve the various social needs of neighborhood residents, workers, and visitors, including a new public open space along an improved Mystic River waterfront.

2. PURPOSE

a. To fulfill the goals and objectives of the Assembly Square Plan (ASQ Plan).
b. To ensure access to, use, and protection of the Mystic River as an important natural resource.
c. To incentivize the coordinated planning of development in Assembly Square at multiple scales.
d. To permit larger buildings and increased residential density following the approval of a neighborhood or large development plan.
e. To use discretion in the permitting of loading and service areas.
f. To provide flexibility in the permitting of signs.
g. To increase the supply and diversity of housing, including unit type, size, bedroom count, and affordability.

3. APPLICABILITY

a. Where the provisions of this Section conflict with those found elsewhere in this Ordinance, the provisions of this Section apply.

4. PREVIOUSLY APPROVED PLANS

a. Any PUD Preliminary Master Plan approved prior to the adopt date of this Ordinance is considered an approved Neighborhood Development Plan and all approvals and conditions remain in effect. Further applications may be submitted for amendments to the approved plan and for special permits required for individual projects by the previously approved plan.
b. Due to the long-term, comprehensive nature of neighborhood development planning, the Planning Board may , upon granting a Special Permit, waive any provision of this Ordinance that was not applicable to a site located within the plan area of a previously approved

neighborhood development plan.

i. In its discretion to approve or deny a Special Permit authorizing a waiver of the provisions of this Ordinance, the Planning Board shall consider the following:
   a). The review considerations for all Special Permits as specified in §10.D.1.e. Review Criteria.
   b). Consistency with the previously approved neighborhood development plan and of the provisions of this Ordinance that were in place at the time of the approval; and
   c). Impact on the public realm that would result from strict compliance to the standard of this Ordinance.

5. DEVELOPMENT PLANNING

a. Development Sites
   i. Development sites of five (5) or more acres in land area require large development plan approval as a prerequisite to other development review and permitting.
   ii. Development sites of forty (40) or more acres in land area require neighborhood development plan approval as a prerequisite to other development review and permitting.
   iii. Development sites are not permitted to include portions of land area separated by more than 100 feet in distance.
   iv. Development sites are not permitted to include land area which is part of a separate large development plan.

b. Subdivision
   i. The subdivision of a development site and the construction of thoroughfares is prohibited prior to the approval of a neighborhood development plan or a large development plan.

c. Plan Revisions
   i. The Director of Traffic and Parking reviews and decides all applications for a plan revision relating to matters of traffic, circulation, parking, and loading.
   ii. The Planning Director reviews and decides all applications for a plan revision relating to all other matters.
   iii. The following revisions are considered a MAJOR AMENDMENT TO a previously approved large development plan or NEIGHBORHOOD DEVELOPMENT PLAN AND REQUIRE A SPECIAL PERMIT:
      a). any increase in floor area ratio by 15% or more;
      b). any increase in ground coverage ratio by 15% or more;
      c). substantial changes in access to the site; and
      d). modifications that result in a condition that is substantially more detrimental to the surrounding neighborhood than the existing condition(s) and approved plans.
   iv. All other proposed revisions to a previously approved large development plan or NEIGHBORHOOD DEVELOPMENT PLAN are considered a DE MINIMUS within the Assembly Square special district.

6. PUBLIC REALM STANDARDS

i. Urban Design
   ii. The following standards supersede the provisions of §8.B. Urban Design:
      a). Blocks
         i). BLOCKS must have individual BLOCK FACES no greater than five-hundred (500) feet and a total perimeter no greater than eighteen-hundred (1,800) feet.
      b). Lots
         i). LOTS must be platted to have a maximum LOT width of five hundred (500) feet.

a. Thoroughfares
   i. Street and sidewalk design may be designed according to the provisions of Article 8: Public Realm Standards of on the Assembly Square Public Realm Design Guidelines, provided that any street shown in such Guidelines as running through an existing building is not required to be constructed until such building is demolished.

b. Civic Space
   i. At least twelve and a half percent (12.5%) of the total land area of a development site subject to large development plan approval or neighborhood development plan approval must be designed as publicly accessible civic space. See §8.C. Civic & Recreation Spaces.
   ii. Civic space provided must be distributed as a series of separate spaces of various types and sizes throughout the development site.

c. Pedestrian Connections
   i. Continuous pedestrian connections must be provided between all major points of pedestrian activity on a Development Site, including, but not limited to, connections to the Mystic River waterfront, connections to all public and private ways abutting a Development Site, and any transit stops.
   ii. Development sites must improve access between the ASQ-SD and the Ten Hills and East Somerville neighborhoods by means of sidewalk connections, crosswalks, landscaping, traffic signalization, and traffic calming methods, as appropriate.

7. BUILDING PROVISIONS

a. General
   i. Structured parking, whether above grade or below grade, is excluded for purposes of calculating Gross Floor Area, Net Floor Area and Floor Area Ratio.
   ii. Non-habitable architectural features may exceed the hight limits identified on Table 4.1 and Table 4.2.

b. Building Design
   i. Buildings should be set back from the front lot line no more than five (5) feet except in special circumstances, where greater setbacks would enhance the pedestrian friendly experience of the frontage.
   ii. Ground story building facades and accompanying principal entrances must provide extensive areas of window glass to provide visual access to interior uses.
   iii. Building frontage should include windows providing

TABLE 4.1 Base Dimensional Standards

	by Right	by Special Permit
LOT SIZE		
Area (min)	5,000 sq. ft.	10,000 sq. ft.
BUILDING MASSING		
Gross Floor Area (max.)	n/a	50,000 sq ft.
Floor Area Ratio (max.)	1.0	2.0
Maximum Building Height (max.)	--	--
Buildings within 150 feet of the Mystic River bank[1]	30 feet (Park buildings only)	30 feet (Park buildings only)
Buildings between 150 feet and 250 feet of the Mystic River bank	40 feet	50 feet
Buildings between 250 feet and 350 feet of the Mystic River bank	40 feet	50 feet
Within 1,000 feet of an Assembly Square Station Entrance	40 feet	50 feet
All other Locations	40 feet	50 feet
DENSITY		
Lot Area/Dwelling Unit (min)	--	--
1-9 Units	600	600
10 or more Units	300	300
OPEN SPACE		
Total Open Space (min.)	25%	25%
Useable Open Space (min.)	10%	12.5%

1. As defined by 310 CMR 10.54.2.C.

TABLE 4.2 LDP & NDP Dimensional Standards

	by Special Permit (individual phases)
LOT SIZE	
Area (min)	n/a
BUILDING MASSING	
Gross Floor Area (max.)	n/a
Floor Area Ratio (max.)	10.0
Maximum Building Height (max.)	--
Buildings within 150 feet of the Mystic River bank[1]	30 feet (Park buildings only)
Buildings between 150 feet and 250 feet of the Mystic River bank	70 feet
Buildings between 250 feet and 350 feet of the Mystic River bank	90 feet
Within 1,000 feet of an Assembly Square Station Entrance	250 feet
All other Locations	125 feet
DENSITY	
Lot Area/Dwelling Unit (min)	--
1-9 Units	n/a
10 or more Units	n/a
CIVIC SPACE	
Total of Development Site (min.)	See §3.A.b. Civic Space

1. As defined by 310 CMR 10.54.2.C.

visual access to the interior of a space, arcades, display windows, entry areas, awnings, or other such features along no less than seventy (70) percent of the horizontal length of all ground story facades that face public thoroughfares or the Mystic River.

iv. Forty percent (40%) of this activated facade area on the Ground Floor of Building walls along primary and secondary streets shall consist of window or doors meant for public entry and exit.

v. Multiple and frequent entrances oriented toward front lot lines are encouraged.

vi. Principal entrances must be clearly defined, through the use of building elements such as canopies, porticos, overhangs, peaked roof forms, and/or arches. Outdoor patios, tile work, moldings, integral planters or wing walls with landscaped areas, or places for sitting are required for entries set back from the front lot line.

vii. Buildings must provide active uses on the ground story that take advantage of views of the waterfront and other open spaces, and add a street front presence to public thoroughfares and sidewalks;

viii. Uninterrupted or unfenestrated lengths of facade exceeding thirty-five (35) horizontal feet are prohibited.

ix. Facades greater than one hundred (100) feet in horizontal width must include a change in vertical wall plane with a depth or projection of at least three (3) percent of the length of the facade extending at least twenty (20) percent of the length of the facade.

c. Efficiency of Design

i. Every effort shall be made to design Buildings and use materials and construction techniques to optimize daylight in building interiors, natural ventilation, energy efficiency, and to minimize exposure to and consumption of toxics and non-renewable resources and incorporate appropriate "green" design techniques.

8. USE PROVISIONS

a. General

i. The use of real property is permitted according to Table 4.3 in ASQ-SD.

ii. Real property may have one or more principal uses established.

b. Use Categories

i. Principal uses are grouped into the following major use categories:

a). Office, R&D, & Biotechnology

b). Retail

c). Business Services

d). Residential

TABLE 4.3 Principal Uses in ASQ-SD

	by Right	by Special Permit
OFFICE, R&D, & BIOTECHNOLOGY CATEGORY		
Office, other than medical	up to 9,999 g.s.f.	10,000 or more g.s.f.
Medical office, medical or health clinic	up to 9,999 g.s.f.	10,000 or more g.s.f.
Laboratory engaged in research, experimental and testing activities which may include the development of mock-ups and prototypes but not the manufacture of finished products	up to 9,999 g.s.f.	10,000 or more g.s.f.
RETAIL CATEGORY		
Store selling convenience and grocery goods such as food, candy, newspaper, and tobacco products	up to 9,999 g.s.f.	10,000 or more g.s.f.
General merchandise, department store, supermarket	up to 9,999 g.s.f.	10,000 or more g.s.f.
Specialty food stores but not those intended for consumption on the premises, including candy store, meat market, delicatessen or bakery, but not fast food service	up to 9,999 g.s.f.	10,000 or more g.s.f.
Store selling or renting goods such as books, stationary, drugs, sporting goods including bicycles and accessories, jewelry, photographic equipment and supplies, flowers, novelties, cars, footwear, apparel, fabrics, accessories and the like that are typically a size a customer can carry by hand	up to 9,999 g.s.f.	10,000 or more g.s.f.
Store selling or renting video tapes	up to 9,999 g.s.f.	10,000 or more g.s.f.
Store selling furniture, home furnishings, carpets, or home appliances and equipment, including audio, computer, and video equipment	up to 9,999 g.s.f.	10,000 or more g.s.f.
Store selling hardware, paint, wallpaper, lawn and garden supplies (all operations conducted entirely within an enclosed building)	up to 9,999 g.s.f.	10,000 or more g.s.f.
Sale or rental of equipment and supplies such as office furniture home improvement equipment or tools (all operations conducted entirely with an enclosed building)	up to 9,999 g.s.f.	10,000 or more g.s.f.
Crafts related store selling jewelry, t-shirts, crafts, etc. where production occurs on premises	up to 9,999 g.s.f.	10,000 or more g.s.f.
BUSINESS SERVICES CATEGORY		
Beauty salon, barber shop, tailor, dressmaker, shoe repair	up to 9,999 g.s.f.	10,000 or more g.s.f.
Self-service laundromat or dry cleaning, pick-up station with processing done elsewhere	up to 9,999 g.s.f.	10,000 or more g.s.f.
Real estate sales or rental, travel agency, insurance agency, ticket agency	up to 9,999 g.s.f.	10,000 or more g.s.f.
Bank or credit union	up to 9,999 g.s.f.	10,000 or more g.s.f.
Photocopying, reproduction and photographic services including commercial photography, but not commercial printing	up to 9,999 g.s.f.	10,000 or more g.s.f.
Repair of household appliances, small tools, or equipment	less than 5,000 g.s.f.	5,000 or more g.s.f.
Newspaper distribution agency	up to 9,999 g.s.f.	10,000 or more g.s.f.
Office of veterinarian	up to 9,999 g.s.f.	10,000 or more g.s.f.
RESIDENTIAL CATEGORY		
Dwellings, multiple (seven (7) or more units)	no	yes
Artist housing (seven (7) or more units)	no	yes
Congregate housing (seven (7) or more units)	no	yes
Other Uses (uses not in an official use category)		
Residential		
Cottage, house, triple decker, four-plex, six-plex, and townhomes	no	yes
Mobile homes in service on a temporary basis, for less than one (1) year	no	yes
Conversion of a building, owned or previously owned by the City of Somerville in the past 2 years, to residential use	no	yes
Other Residential Uses		

TABLE 4.3 Principal Uses in ASQ-SD

	by Right	by Special Permit
Boarding house/single room occupancy (SRO) building	no	yes
Dormitory, fraternity, or sorority	no	yes
Community or group residence	no	yes
Homeless shelter	no	yes
Artist housing (six (6) or less units)	no	yes
Congregate housing	no	yes
Accessory Residential Uses		
Outdoor, off-street parking for no more than one commercial vehicle, not exceeding one and a half (1.5) tons	no	yes
Off-street parking for more than one commercial vehicle, if owned by resident of premises	no	yes
Exterior storage of equipment not customarily associated with home maintenance	no	yes
Home occupation	no	yes
Office within a primary residence of an architect, engineer, attorney, physician, dentist or other recognized profession	no	yes
Family day care (for six (6) or less children)	no	yes
Shop and storage facilities for a resident tradesman such as carpenter, plumber, electrician, etc. where conducted in such a manner that all dust, fumes, gases, odors, smoke or vapors, noise or vibration are effectively confined to an enclosed building	no	yes
Institutional Uses		
All religious uses	yes	n/a
All education purposes by a non-profit educational corporation	yes	n/a
Child care facility (day care center or school age child care program as defined in M.G.L. c.28A, s.9)	yes	n/a
School, kindergarten, after school center	no	yes
Library, museum, art gallery	less than 10,000 g.s.f.	10,000 or more g.s.f.
Hospital	no	yes
Nursing home	no	yes
Non-profit community center (ie. YMCA)	less than 10,000 g.s.f.	10,000 or more g.s.f.
Private, non-profit club or lodge for members only	less than 10,000 g.s.f.	10,000 or more g.s.f.
Buildings and uses owned by the City of Somerville	less than 10,000 g.s.f.	10,000 or more g.s.f.
Recreational Uses		
Public park, playground, recreational area	yes	n/a
Private, non-profit outdoor recreational facility	no	yes
Commercial health, exercise, racquet, weight reduction, bowling, or similar facility	less than 10,000 g.s.f.	10,000 or more g.s.f.
Theater, cinema or other public assembly (NOTE: In the case of multiple theater/ cinema operations on the same site, the total aggregate footage of all the theaters or cinemas shall determine gross floor area)	less than 10,000 g.s.f.	10,000 or more g.s.f.
Marinas and dry boat storage	no	yes
Concessions, amusements, games except amusement and electronic amusement devices requiring a license under the provisions of Section 8-15 of Chapter 8 of the Code of Ordinances, as amended	less than 10,000 g.s.f.	10,000 or more g.s.f.
Amusement and electronic amusement devices requiring licensing under Section 8-15 of Chapter 8 of the Code of Ordinances	no	yes
Sales or Rental of Goods or Equipment		
Package liquor store with no consumption of beverages on the premises	up to 9,999 g.s.f.	10,000 or more g.s.f.
Mall	no	yes

TABLE 4.3 Principal Uses in ASQ-SD

	by Right	by Special Permit
Building and construction materials store (all operations conducted entirely within an enclosed building)	less than 5,000 g.s.f.	5,000 or more g.s.f.
Commercial greenhouse or nursery (all operations conducted entirely within an enclosed building)	up to 9,999 g.s.f.	10,000 or more g.s.f.
Commercial greenhouse or nursery (operations, in whole or in part, conducted outside an enclosed building)	less than 5,000 g.s.f.	5,000 or more g.s.f.
Farmers Market or roadside stand selling agricultural products (indoor or outdoor)	up to 9,999 g.s.f.	10,000 or more g.s.f.
Eating, Drinking & Transient Accommodations		
Restaurant, other than fast food (all operations conducted entirely within an enclosed building)	up to 4,999 g.s.f.	5,000 or more g.s.f.
Restaurant, other than fast food (operations, in whole or in part, conducted outside an enclosed building)	less than 2,500 g.s.f.	2,500 or more g.s.f.
Fast order food establishments, including franchises, subshops, pizza shops, and the like (all operations conducted entirely within an enclosed building)	up to 4,999 g.s.f.	5,000 or more g.s.f.
Fast order food establishments, including franchises, subshops, pizza shops, and the like (operations, in whole or in part, conducted outside an enclosed building)	up to 4,999 g.s.f.	5,000 or more g.s.f.
Caterer preparing meals for consumption off site	up to 9,999 g.s.f.	10,000 or more g.s.f.
Hotel, motel	less than 10,000 g.s.f.	10,000 or more g.s.f.
Bar, tavern, drinking establishment, nightclub, dance hall, entertainment facility, convention center	up to 4,999 g.s.f.	5,000 or more g.s.f.
Business Services		
Funeral parlor	no	yes
For-profit school for instruction in arts, skills, or vocational training	up to 9,999 g.s.f.	10,000 or more g.s.f.
Kennel, boarding of household pets, pet store (all operations conducted entirely within an enclosed building)	up to 4,999 g.s.f.	5,000 or more g.s.f.
Kennel, boarding of household pets, pet store (operations, in whole or in part, conducted outside an enclosed building)	up to 4,999 g.s.f.	5,000 or more g.s.f.
Tattoo, body piercing, and/or scarification facilities	no	yes
Commercial & Institutional Services		
Bakery, wholesale	up to 4,999 g.s.f.	5,000 or more g.s.f.
Industrial services such as machine shop, welding	no	less than 5,000 g.s.f.
Distribution center, parcel delivery, commercial mail delivery center	no	up to 9,999 g.s.f.
Shop and storage facilities for tradesmen such as carpenter, plumber, electrician, etc. engaged in the construction and repair of residential buildings and other light frame structures with incidental sale of building materials or products on the premises (all operations conducted entirely within an enclosed building)	less than 5,000 g.s.f.	up to 9,999 g.s.f.
Shop and storage facilities for tradesmen such as carpenter, plumber, electrician, etc. engaged in the construction and repair of residential buildings and other light frame structures with incidental sale of building materials or products on the premises (operations, in part or in whole, conducted outside an enclosed building)	no	up to 9,999 g.s.f.
Office, yard and storage facilities for construction company such as a general contractor, landscape contractor (all operations conducted entirely within an enclosed building)	no	up to 9,999 g.s.f.
Office, yard and storage facilities for construction company such as a general contractor, landscape contractor (operations, in part or in whole, conducted outside an enclosed building)	no	less than 5,000 g.s.f.
Bottle redemption center or collection center for recycling of non-hazardous materials such as glass, aluminum, paper	no	less than 5,000 g.s.f.
Wholesale Business & Wholesale Storage		

TABLE 4.3 Principal Uses in ASQ-SD

	by Right	by Special Permit
Wholesale business or storage, including office, sales and display space of such a business, provided that not more than 25 percent of the gross floor area is used for assembly of products, but not including wholesale storage of flammable liquids, gas or explosives (all operations conducted entirely within an enclosed building)	no	yes
Wholesale business or storage, including office, sales and display space of such a business, provided that not more than 25 percent of the gross floor area is used for assembly of products, but not including wholesale storage of flammable liquids, gas or explosives (operations, in part or in whole, conducted outside an enclosed building)	no	less than 25,000 g.s.f.
Industrial Uses		
Light manufacturing when the processes involved are limited to assembly or finishing work of electronic products, appliances, hand tools, furniture and the like (conducted entirely within an enclosed building in a manner that all dust, fumes, gases, odors, smoke or vapors, noise or vibration are effectively confined to the enclosed building)	no	less than 24,999 g.s.f.
Light manufacturing when the processes involved are limited to assembly or finishing work of electronic products, appliances, hand tools, furniture and the like conducted, in part or in whole, outside an enclosed building	no	less than 10,000 g.s.f.
Manufacturing use, including product research, development and testing activities conducted inside an enclosed building, other than biotechnology	no	yes
Communications, Utility, & Transportation Uses		
Telephone exchange and facilities serving telecommunications carriers and internet service providers, including but not limited to: switching, relay and telecommunications data storage and distribution centers	less than 10,000 g.s.f.	10,000 or more g.s.f.
Radio or television studio without transmitting or receiving towers	less than 5,000 g.s.f.	5,000 or more g.s.f.
Wireless communications facility	no	yes
Commercial ambulance service	no	yes
Substation and pumping station	no	yes
Motor Vehicle Related Sales & Service		
Motor vehicle rental	no	yes
Service station, primarily for the sale of fuel, but including other motor oil products and accessories, and minor repairing, lubrication, and adjustment (fuel pumps may be outside enclosed building)	no	yes
Structured or open lot (outdoor) motor vehicle parking where the parking spaces are not accessory to a principal use on the same lot and where no sales or service take place	no	yes
Limousine rental and minor servicing (all operation conducted entirely within an enclosed building)	no	yes
Bus and taxi rental, storage, and servicing	no	yes
Accessory Commercial, Industrial, & Institutional Uses		
Accessory retail or business service uses in an apartment dwelling, hotel, motel, office, institutional use or industrial building	no	yes
Trailer or other mobile structure used for an accessory use, but excluding temporary construction structure (for up to one (1) year)	no	yes
Accessory assembly or light manufacturing, in conjunction with a permitted business, retail, wholesale or institutional use	no	yes
Storage, outside an enclosed building, or inoperable and unregistered motor vehicles accessory to a permitted commercial, industrial or institutional use	no	yes

c. Principal Uses
   i. Use categories are further broken down to identify specific principal uses that are regulated differently that the others in the same category and have special provisions concerning changes in use.
d. Changes in Use
   i. Changes in use within the same use category are permitted without additional review, provided the following criteria are met:
      a). The gross floor area of the proposed principal use shall not be greater than one hundred and five (105) percent of the gross floor area of the existing use;
      b). In the case of uses within the residential category, the proposed number of dwelling units shall not exceed the existing number of dwelling units; and
      c). The only exterior changes to the building allowed will be renovations and signage.
   ii. The flexibility to move within the same use category does not apply to legally pre-existing nonconforming uses.
   iii. As part of an approved large development plan or neighborhood development plan, the Planning Board may specify permitted uses for any or all phases of development and permit the change of use between these specified uses without further review.
   iv. Uses listed as "Other Uses" require review as indicated on Table 4.3.
e. Other Uses
   i. Uses that may be permitted but are not classified into any use category are listed on Table X as 'Other Uses'.
f. Restrictions
   i. Principal uses not expressly authorized are prohibited.
   ii. Drive-up and drive-through uses are prohibited.
   iii. Ground story retail uses over fifty-thousand (50,000) gross square feet are prohibited.
   iv. Ground story retail uses larger than fifty thousand (50,000) square feet are prohibited.
   v. Any development providing five thousand (50,000) net square feet of retail floor area must provide one and one half (1.5) square feet of non-retail uses for every square foot over fifty thousand (50,000) net square feet of Retail use.

9. PARKING DESIGN STANDARDS &GUIDELINES

a. No surface parking is permitted within two-hundred (200) feet of the Mystic River Bank as defined by 310 CMR 10.54.2.c.
b. To every extent possible, parking should be provided underground or in structures.
c. Parking lots should avoid large expanses that are unbroken by buildings or substantial landscaped areas.

10. GENERAL DEVELOPMENT PROVISIONS

a. Open Space
   i. Development surrounding open space should result in a net benefit to the space in terms of activation, enhanced quality and attractiveness, expanded use, and public access.
   ii. Permanently dedicated open space may be provided off-site if approved by the Planning Board.
   iii. Landscaping strips in parking areas do not apply to usable open space calculations.
   iv. Developments are encouraged to make significant contributions to Open Space along the Mystic River adjacent to the ASQ-SD. These contributions shall be designed and developed with special attention to the provision of wildlife habitat and contiguous migration corridors, and to help reduce the level of storm water runoff into the Mystic River.
b. Landscaping
   i. All development must meet the landscape requirements of Article X. Development Standards.
c. Signs
   i. All signs must comply with standards set forth in §6.G. Signs except as follows:
      a). The top of a wall sign attached parallel to a building shall be no higher than 35 feet above finished grade.
      b). Nonconforming freestanding, directional, or wall signs may be approved by Special Permit.
         i). In its discretion to approve or deny a special permit authorizing a nonconforming freestanding, directional, or wall signs, the Planning Board shall consider the following:
            a. The review considerations for all Special Permits as specified in §10.D.1.e. Review Criteria.
            b. The creation of legible urban environment free from the over use of signs.
            c. Aesthetics, proportion, scale of the proposed sign in relation to the building or storefront.
            d. Design, location, and context of other signage on the building and on surrounding properties.
d. Loading Spaces
   i. Loading spaces must be located away from major public thoroughfares, the Mystic River, and other highly visible locations. The visual impact of exposed loading spaces should be reduced through creative design solutions.
   ii. Modifications to, relocations of, or creation of new loading space for an existing building requires a special permit.
      a). In its discretion to approve or deny a special permit authorizing a modification to, relocation of, or creation of new loading space for an existing building, the Planning Board shall consider the following:
         i). The review considerations for all Special Permits as specified in §10.D.1.e. Review Criteria.
         ii). Documented need for loading facilities.
         iii). Impact on pedestrian, bicycle, and vehicular traffic and circulation patterns in the neighborhood.
e. Screening
   i. Exposed transformers and other machinery, storage

and inventory areas, service and truck loading areas, dumpsters, utility infrastructure, and other similar structures must be effectively screened by plantings and other methods so that they are not directly visible from either the proposed development or surrounding properties.

ii. Electric, telephone, cable TV and other such lines and equipment should be placed underground from the source or connection, of effectively screened from public view.

f. Storm water Management

i. Storm water should be removed from all roofs, canopies, and paved areas, and routed through well-engineered systems designed with appropriate storm water management techniques.

ii. Skimming devices, oil and grease traps, and similar facilities at the collection or discharge points for paved surface shall be collected.

iii. Where practical, the routing of runoff through sheet flow, swales, or other means increasing filtration and percolation is strongly encouraged.

11. DEVELOPMENT REVIEW

a. Authority

i. The Planning Board is the review board for all development review in the ASQ-SD, except for Variances.

b. Powers of the Planning Board

i. At its discretion, the Planning Board may waive the provisions of §4.A.7. Building Provisions, §4.A.9. Parking Design Standards &Guidelines, and §4.A.10. General Development Provisions by Special Permit.

a). In its discretion to approve or deny a special permit authorizing a waiver as specified in §11.b.i, the Planning Board shall consider the following:

i). Strict enforcement of such standards or requirements would run counter to achieving the objectives of the ASQ Plan;

ii). The application is substantially consistent with the objectives of the ASQ Plan and advances the objectives of the ASQ Plan;

iii). In the case of any Alteration of a Nonconforming Structure, a Change of Nonconforming Use, or a Major Amendment to an approved NDP or LDP, such alteration, change or amendment shall conform, to the extent feasible, to the objectives of the ASQ Plan; and

iv). In the case of waivers from the landscaping requirement, the Planning Board must determine that compliance would require a level of landscaping that is incompatible with the objectives of the ASQ Plan.

ii. Waiver of sign requirements shall require submittal of an alternative sign standard that must be approved by the Planning Board. All signs must comply with these standards. Under no circumstances are off-premises signs permitted.

iii. The Planning Board may require independent peer review of a storm water management plan by an accredited independent engineering firm.

c. Standard Procedures

i. Application Submittal Requirements

a). All development in excess of ten thousand (10,000) square feet is required to submit a completed Leadership in Energy & Environmental Design (LEED) worksheet to the Building Official at the time application submittal.

d. Preliminary Review

i. A pre-submittal meeting is required for all types of development review.

ii. All development over ten thousand (10,000) square feet in gross floor area requires review by the Urban Design Commission in accordance with the provisions of §10.B.3. Design Review.

a). During its review, the Urban Design Commission shall consider the following:

i). The siting, location, and setback of buildings to create a presence on existing street edges or along major internal circulation routes, enhance the pedestrian friendly experience of thoroughfares, and reinforce both existing and future circulation patterns that may serve more than one site;

ii). The creation of interesting entrance areas that are visible and directly accessible from major public access points, streets, and circulation routes;

iii). The pattern of bays, rhythms, and dimensions to create continuous visual interest, variety in the design of all facades, and break down the overall scale of development in support the pedestrian-scale.

iv). The use of materials and colors that is consistent with traditional buildings in the area with historic merit; and

v). The location and screening of building equipment and service areas away from public thoroughfares or major interior circulations routes.

e. Administrative Development Review

i. Development permitted "by-right" requires only a zoning permit in accordance with the provisions of §10.C.1. Zoning Permit.

ii. Subdivision of a development site requires the approval of a subdivision plan in accordance with the provisions of §10.C.8. Subdivision Plan Approval.

a). During its review, the Planning Board shall verify that the submitted plan conforms to the following:

i). the review considerations for all Subdivision Plan Approval as specified in §10.C.8.e. Review Criteria; and

ii). any approved large development plan or neighborhood development plan governing the subject property, as applicable.

f. Discretionary Development Review

i. Development permitted "by Special Permit" requires a special permit in accordance with

§10.D.1. Special Permit as a prerequisite to a the issuance of a zoning permit.

a). In its discretion to grant any Special Permit required by this Section, the Planning Board shall consider the following:
   i). the adopted comprehensive Master Plan of the City of Somerville; the ASQ Plan, and other existing policy plans and standards established by the City;
   ii). the purpose of the ASQ-SD and of this Ordinance in general;
   iii). any applicable Transportation Study, Traffic Access and Impact Study, and/or Transportation Demand Management Plan submitted by the Applicant;
   iv). the impact of development on public services and facilities serving the development, such as the sanitary sewer system, the storm drainage system, the public water supply, the recreational system, the street system for vehicular traffic, and the sidewalks and footpaths for pedestrian traffic;
   v). access to buildings, and the grounds adjoining them, for operations by fire, police, medical and other emergency personnel and equipment;
   vi). the compatibility of any proposed building over one hundred and twenty five (125) feet with surrounding structures and natural site features, including view corridors to the Mystic River;
   vii). the shadow impacts of any proposed buildings on publicly accessible open space or civic spaces;
   viii). the compatibility of the size, location, design, color, texture, lighting, and materials of all proposed permanent signs and outdoor advertising structures or features with the scale and character of proposed buildings; and
   ix). the intent and purpose of design guidelines in this Section.

B. BRICKBOTTOM (BB-SD)

GRAPHIC STILL IN PRODUCTION

1. INTENT

a. To accommodate a neighborhood of mixed-use, moderate-density transit-oriented development with the following characteristics:
   i. An interconnected street grid and comprehensive thoroughfare network that includes new streets and alleys.
   ii. Appealing physical connections to the Washington Street Green Line Station, regional pathways, and the future McGrath Boulevard.
   iii. A distribution of diverse civic space types including a public common.
   iv. A diverse mix of uses including fabrication, production, performing arts, office, research & development, and residential uses.
   v. Primary uses distributed throughout the neighborhood so that the many activities of daily living can occur within walking distance to residences and workplaces.
   vi. Moderate-scale building types that do not exceed seven (7) stories fronting on Joy Street, Fitchburg Street, Chestnut Street, and Linwood Street.
   vii. Large-scale building types that do not exceed ten (10) stories fronting on McGrath Boulevard.
   viii. Architectural and landscape design that spatially defines civic spaces and thoroughfares as outdoor rooms and corridors.

2. PURPOSE

a. To incentivize the coordinated planning of development in Brickbottom at the neighborhood scale.
b. To require a mix of uses consistent with the objectives of the comprehensive Master Plan of the City of Somerville.
c. To permit the development of production building and fabrication loft building types.
d. To permit the development of mixed use and commercial building types following the approval of a neighborhood development plan or large development plan.
e. To use discretion in the permitting of residential uses.

3. APPLICABILITY

a. Where the provisions of this Section conflict with those found elsewhere in this Ordinance, the provisions of this Section shall apply.

4. DEVELOPMENT PLANNING

a. Development Sites
   i. Development sites of two (2) or more acres in land area require large development plan approval as a prerequisite to other development review and permitting.
   ii. Development sites of twenty (20) or more acres in land area require neighborhood development plan approval as a prerequisite to other development review and permitting.
   iii. Development sites are not permitted to include portions of land area separated by more than one hundred (100) feet in distance.
   iv. Development sites are not permitted to include land area which is part of a separate large development plan.
   v. Ownership of a development site need not be in common, but all landowners must consent to the plan.

b. Subdivision
   i. The subdivision of a development site and the construction of thoroughfares is prohibited prior to the approval of a neighborhood development plan or a large development plan.

c. Build-Out
   i. A minimum of five percent (5%) of the total gross floor area of development subject to a neighborhood development plan or large development plan must be provided as leasable floor area for uses from the Arts & Creative Enterprise use category.
   ii. At full build-out, no less than sixty-five percent (65%) of the total gross floor area of development subject to a neighborhood development plan or large development plan must be provided to commercial uses.

d. Phasing
   i. Neighborhood development plans and large development plans must include a development phasing program indicating the expected sequence of development within the plan area.
   ii. Development phasing must include a strategy for the delivery of required civic space and arts & creative enterprise uses prior to, or in conjunction with, the completion of other development.

5. PUBLIC REALM STANDARDS

a. Urban Design
   i. The following standards supersede the provisions of §8.B. Urban Design:
      a). Subdivision
         i). Development sites over two (2) acres in land area must be subdivided with THOROUGHFARES to create BLOCKS conforming to §8.B.4. Blocks and platted with LOTS according to §8.B.6. Lots.

b. Civic Space
   i. At least twelve and a half percent (12.5%) of the total land area of a development site subject to large development plan approval or neighborhood development plan approval must be designed as publicly accessible civic space. See §8.C. Civic & Recreation Spaces.
   ii. Civic space provided must be distributed as a series of separate spaces of various types and sizes throughout the development site.

c. Thoroughfares
   i. The development of thoroughfares requires site development plan approval in accordance with the provisions of §10.C.5. Site Development Plan Approval as a prerequisite to the issuance of a zoning permit.

6. BUILDING STANDARDS

a. The following building types are permitted by-right and require only a zoning permit:
   i. Production Building
   ii. Fabrication Loft

b. Subject to an approved neighborhood development plan or large development plan, the following building types require site development plan approval as a prerequisite to the issuance of a zoning permit:
   i. Commercial Building
   ii. Mixed-Use Building

7. PRINCIPAL BUILDING TYPES

a. Production Building

A moderate to large floor plate, up to two story building type, often naturally lit with a monitor, clerestory, or sawtooth roof.

i. Lot Standards

LOT DIMENSIONS	
A Width (min)	40 ft.
A Depth (min)	100 ft.
Area (min)	5,000 sq. ft.

LOT COVERAGE	
A Permeable Surface	10%

ii. Placement

BUILDING SETBACKS		
A Primary Front Setback	0' min.	15' max.
A Secondary Front Setback	0' min.	15' max.
A Side Setback (min)	0 ft.	
A Side Setback Abutting NR (min)	5 ft.	
Rear Setback (min)	10 ft.	
Rear Setback Abutting NR	15 ft.	

PARKING SETBACKS	
A Primary Front Setback (min)	20 ft.
A Secondary Front Setback (min)	20 ft.

Production Building (cont.)
A moderate to large floor plate, up to two story building type, often naturally lit with a monitor, clerestory, or sawtooth roof.

iii. Massing & Composition

iv. Uses & Features

MAIN BODY	
J Facade Build Out (min)	50%
K Floor Plate	45,000 sq. ft.
M Building Height (max)	2 stories (50 ft.)

PERMITTED BUILDING COMPONENTS	
Awning	See X.x.x
Entry Canopy	See X.x.x
Bay	See X.x.x

FACADE COMPOSITION	
N Ground Story Fenestration, Front (min)	40%
O Ground Story Fenestration, Secondary Front (min)	20%
Blank Wall (max)	50 ft.
Continuous Facade (max.)	100 ft.

PERMITTED BUILDING FRONTAGE	(1 required)
Lobby Entrance	See X.x.x
Storefront	See X.x.x
Terrace	See X.x.x

OCCUPANCY	
Use Category	see X.x.x

b. Fabrication Loft

A moderate to large floor plate, multi-story building type subdivided for multiple tenants, often designed with tall ceilings, expansive windows, wide corridors, service elevators, and loading docks.

i. Lot Standards

LOT DIMENSIONS	
A Width (min)	40 ft.
A Depth (min)	100 ft.
Area (min)	5,000 sq. ft.

LOT COVERAGE	
A Permeable Surface	10%

ii. Placement

BUILDING SETBACKS		
A Primary Front Setback	0' min.	15' max.
A Secondary Front Setback	0' min.	15' max.
A Side Setback (min)	0 ft.	
A Side Setback Abutting NR (min)	5 ft.	
Rear Setback (min)	10 ft.	
Rear Setback Abutting NR	15 ft.	

PARKING SETBACKS	
A Primary Front Setback (min)	20 ft.
A Secondary Front Setback (min)	20 ft.

Fabrication Loft (cont.)
A moderate to large floor plate, multi-story building type subdivided for multiple tenants, often designed with tall ceilings, expansive windows, wide corridors, service elevators, and loading docks.

iii. Massing & Composition

iv. Uses & Features

MAIN BODY	
J Facade Build Out (min)	50%
K Floor Plate	45,000 sq. ft.
M Building Height (max)	4 stories (60 ft.)

PERMITTED BUILDING COMPONENTS	
Awning	See X.x.x
Entry Canopy	See X.x.x
Bay	See X.x.x

FACADE COMPOSITION	
N Ground Story Fenestration, Front (min)	40%
O Ground Story Fenestration, Secondary Front (min)	20%
Blank Wall (max)	50 ft.
Continuous Facade (max.)	100 ft.

PERMITTED BUILDING FRONTAGE	(1 required)
Lobby Entrance	See X.x.x
Storefront	See X.x.x
Terrace	See X.x.x

OCCUPANCY	
Use Category	see X.x.x

c. Commercial Building

A multi-story building type with ground story commercial and upper story non-residential uses.

i. Lot Standards

ii. Placement

LOT DIMENSIONS		
A Width (min/max)	30 ft.	150 ft.
A Subsequent to a LDP or NDP	30 ft.	200 ft.
Depth (min)	40 ft.	
Subsequent to a LDP or NDP	100 ft.	
Area (max)	20,000 sq. ft.	
Subsequent to a LDP or NDP	45,000 sq. ft.	

LOT COVERAGE	
A Permeable Surface	10%

BUILDING SETBACKS		
A Primary Front Setback (min/max)	2 feet	15 feet
A Secondary Front Setback (min/max)	2 feet	15 feet
Side Setback (min)	0 ft.	
Side Setback Abutting NR (min)	5 ft.	
A Rear Setback (min)	10 ft.	
A Rear Setback Abutting NR (min)	15 ft.	

PARKING SETBACKS	
A Primary Front Setback (min)	--
A Surface Parking	20 feet
Structured Parking	20 feet
Secondary Front Setback (min)	--
Surface Parking	10 feet
Structured Parking	2 feet

Commercial Building (cont.)
A multi-story building type with ground story commercial and upper story non-residential uses.

iii. Height & Massing

MAIN BODY	
J Facade Build Out (min)	80%
K Floor Plate (max)	15,000 sq. ft.
Subsequent to a LDP or NDP	--
Up to 5 stories (max)	40,000 sq. ft.
Above 5 stories (max)	20,000 sq. ft.
M Building Height (max)	3 stories (45 ft.)
Subsequent to a LDP or NDP	20 stories (270 ft.)
Ground Story Height (min)	14 feet
Upper Story Height (min)	9 feet

PERMITTED BUILDING COMPONENTS	
Awning	See X.x.x
Entry Canopy	See X.x.x
Bay	See X.x.x
Balcony	See X.x.x

iv. Uses & Features

FACADE COMPOSITION	
N Ground Story Fenestration (min)	70%
O Upper Story Fenestration (min/max)	20% min 50% max.
Blank Wall (max)	20 ft.

PERMITTED BUILDING FRONTAGE	(1 required)
Forecourt	See X.x.x
Lobby Entrance	See X.x.x
Storefront	See X.x.x
Terrace	See X.x.x
Lightwell	See X.x.x

PEDESTRIAN ACCESS	
Principal Entrance Spacing (min)	n/a
Subsequent to a LDP or NDP	30 ft.

USE & OCCUPANCY	
Leasable Space Depth (min)	30 feet
Ground Story Use	Any Commercial
Upper Story Use	Any Commercial

d. Mixed-Use Building

A multi-story building type with ground story commercial and upper story non-residential uses.

i. Lot Standards

ii. Placement

LOT DIMENSIONS		
A Width (min/max)	30 ft.	150 ft.
A Subsequent to a LDP or NDP	30 ft.	200 ft.
Depth (min)	40 ft.	
Subsequent to a LDP or NDP	100 ft.	
Area (max)	20,000 sq. ft.	
Subsequent to a LDP or NDP	45,000 sq. ft.	

LOT COVERAGE	
A Permeable Surface	10%

BUILDING SETBACKS		
A Primary Front Setback (min/max)	2 feet	15 feet
A Secondary Front Setback (min/max)	2 feet	15 feet
Side Setback (min)	0 ft.	
Side Setback Abutting NR (min)	5 ft.	
A Rear Setback (min)	10 ft.	
A Rear Setback Abutting NR (min)	15 ft.	

PARKING SETBACKS	
A Primary Front Setback (min)	--
A Surface Parking	20 feet
Structured Parking	20 feet
Secondary Front Setback (min)	--
Surface Parking	10 feet
Structured Parking	2 feet

Mixed-Use Building (cont.)
A multi-story building type with ground story commercial and upper story non-residential uses.

iii. Height & Massing

MAIN BODY	
J Facade Build Out (min)	80%
K Floor Plate (max)	15,000 sq. ft.
Subsequent to a LDP or NDP	--
Up to 5 stories (max)	40,000 sq. ft.
Above 5 stories (max)	20,000 sq. ft.
M Building Height (max)	3 stories (45 ft.)
Subsequent to a LDP or NDP	20 stories (270 ft.)
Ground Story Height (min)	14 feet
Upper Story Height (min)	9 feet

PERMITTED BUILDING COMPONENTS	
Awning	See X.x.x
Entry Canopy	See X.x.x
Bay	See X.x.x
Balcony	See X.x.x

iv. Uses & Features

FACADE COMPOSITION	
N Ground Story Fenestration (min)	70%
O Upper Story Fenestration (min/max)	20% min 50% max.
Blank Wall (max)	20 ft.

PERMITTED BUILDING FRONTAGE	(1 required)
Forecourt	See X.x.x
Lobby Entrance	See X.x.x
Storefront	See X.x.x
Terrace	See X.x.x
Lightwell	See X.x.x

PEDESTRIAN ACCESS	
Principal Entrance Spacing (min)	n/a
Subsequent to a LDP or NDP	30 ft.

USE & OCCUPANCY	
Leasable Space Depth (min)	30 feet
Ground Story Use	Commercial
Upper Story Use	Residential
Average Dwelling Unit Size (min)	900 sq. ft.

8. USE PROVISIONS

a. The use of real property is regulated according to Table 4.4 Principal Uses in BB-SD.
b. Uses from the following accessory use categories are permitted by-right or by-right with limitations subject to the standards for each specific use, as applicable:
    i. Home Occupations
        a). Family Day Care
        b). Home Office
    ii. Lodging
    iii. Urban Agriculture
    iv. Vehicular Parking

9. DEVELOPMENT REVIEW

a. Authority
    i. The Planning Board is the review board for all development review in the BB-SD, except for variances.
b. Administrative Development Review
    i. Subdivision of a development site requires the approval of a subdivision plan in accordance with the provisions of §10.C.8. Subdivision Plan Approval.
        a). During its review, the Planning Board shall verify that the submitted plan conforms to the following:
            i). the review considerations for all Subdivision Plan Approval as specified in §10.C.8.e. Review Criteria; and
            ii). any approved large development plan or neighborhood development plan governing the subject property, as applicable.
    ii. Building types permitted "by-right" require only a zoning permit in accordance with the provisions of §10.C.1. Zoning Permit.
    iii. Thoroughfares, civic spaces, and building types permitted by "site development plan" require site development plan approval in accordance with the provisions of §10.C.5. Site Development Plan Approval as a prerequisite to a the issuance of a zoning permit.
        a). During its review, the Planning Board shall verify that the submitted plan conforms to the following:
            i). the review considerations for all Site Development Plans as specified in §10.C.5.e. Review Criteria;
            ii). any approved large development plan or neighborhood development plan governing the subject property, as applicable; and
            iii). recommendations of the Urban Design Commission (UDC).
c. Discretionary Development Review
    i. Building types and uses permitted "by Special Permit" require a special permit in accordance with §10.D.1. Special Permit as a prerequisite to a the issuance of a zoning permit.
        a). During its review, the Planning Board shall verify that the submitted plan conforms to the following:
            i). The review considerations for all Special Permits as specified in §10.D.1.e. Review Criteria;
            ii). any approved large development plan or neighborhood development plan governing the subject property, as applicable; and
            iii). recommendations of the Urban Design Commission (UDC).

TABLE 4.4 Principal Uses in BB-SD

Y - by Right
L - by Right with Limitations
SP - by Special Permit
N - NOT Permitted

	Base Uses	Subsequent to a LDP or NDP	Use Specific Regulations and/or Performance Standards
ARTS & CREATIVE ENTERPRISE			
Artisan Production	Y	Y	§5.B.2.a. Artisan Production
Arts Exhibition	Y	Y	§5.B.2.b. Arts Exhibition
Arts Sales & Services	Y	Y	§5.B.2.c. Arts Sales & Services
Creative Studio	Y	Y	§5.B.2.d. Creative Studio
Design Services	Y	Y	§5.B.2.e. Design Services
Shared Workspaces & Arts Education	Y	Y	§5.B.2.f. Shared Workspaces & Arts Education
Work/Live Creative Studio	SP	SP	§5.B.2.g. Work/Live Creative Studio
AUTO-ORIENTED			
Commercial Vehicle Repair & Maintenance	SP	SP	§5.B.3.a. Commercial Vehicle Repair & Maintenance
Dispatch Service (except as noted below)	SP	SP	§5.B.3.b. Dispatch Service
Towing Service	N	N	§5.B.3.b.i. Towing Service
Gasoline Station	N	N	§5.B.3.c. Gasoline Station
Motor Vehicle Parking (as noted below)	--	--	§5.B.3.d. Motor Vehicle Parking
Car Share Parking	Y	Y	§5.B.3.d.i. Car-Share Parking
Commercial Parking	SP	SP	§5.B.3.d.ii. Commercial Parking
Off-Site Accessory Parking	SP	SP	§5.B.3.d.iii. Off-Site Accessory Parking
Personal Vehicle Repair & Maintenance	SP	SP	§5.B.3.e. Personal Vehicle Repair & Maintenance
Vehicle Sales	SP	SP	§5.B.3.f. Vehicle Sales
CIVIC & INSTITUTIONAL			
Community Center	Y	Y	§5.B.4.a. Community Center
Educational Facility	Y	Y	§5.B.4.b. Educational Facility
Hospital	SP	SP	§5.B.4.c. Hospital
Library	Y	Y	§5.B.4.d. Library
Minor Utility Facility	SP	SP	§5.B.4.e. Minor Utility Facility
Major Utility Facility	N	N	§5.B.4.f. Major Utility Facility
Museum	Y	Y	§5.B.4.g. Museum
Private Non-Profit Club or Lodge	SP	SP	§5.B.4.h. Private, Non-Profit Club or Lodge
COMMERCIAL SERVICES			
Animal Services (as noted below)	--	--	§5.B.5.a. Animal Services
Pet Grooming	Y	Y	§5.B.5.a.i. Pet Grooming
Pet Training, Care, or Shelter	Y	Y	§5.B.5.a.ii. Pet Training, Care, or Shelter
Veterinarian	Y	Y	§5.B.5.a.iv. Veterinarian
Assembly & Entertainment	SP	SP	§5.B.5.b. Assembly and Entertainment
Banking & Financial Services (except as noted below)	Y	Y	§5.B.5.c. Banking & Financial Services
Personal Credit	N	N	§5.B.5.c.i. Personal Credit
Broadcast and/or Recording Studio	Y	Y	§5.B.5.d. Broadcast and/or Recording Studio
Building & Home Repair Services	SP	N	§5.B.5.e. Building & Home Repair Services

TABLE 4.4 Principal Uses in BB-SD

Y - by Right
L - by Right with Limitations
SP - by Special Permit
N - NOT Permitted

	Base Uses	Subsequent to a LDP or NDP	Use Specific Regulations and/or Performance Standards
COMMERCIAL SERVICES (CONT.)			
Business Support Services	Y	Y	§5.B.5.f. Business Support Services
Caterer/Wholesale Food Production	Y	Y	§5.B.5.g. Caterer/Wholesale Food Production
Day Care Service (as noted below)	--	--	§5.B.5.h. Day Care Service
Adult Day Care Center	L	L	§5.B.5.h.i. Adult Day Care Center
Child Day Care Center	Y	Y	§5.B.5.h.ii. Child Day Care Center
Maintenance & Repair of Consumer Goods	Y	Y	§5.B.5.i. Maintenance & Repair of Consumer Goods
Personal Services (except as noted below)	Y	Y	§5.B.5.j. Personal Services
Body-Art Establishment	SP	SP	§5.B.5.j.i. Body Art
Gym or Health Club	SP	SP	§5.B.5.j.ii. Gym or Health Club
Funeral Home	SP	SP	§5.B.5.j.iii. Funeral Home
Health Care Provider	SP	SP	§5.B.5.j.iv. Health Care Provider
Recreation Facility	SP	SP	§5.B.5.k. Recreation Facility
EATING AND DRINKING			
Bar or Tavern	SP	SP	§5.B.6.a. Bar or Tavern
Restaurant, Café, Bakery	Y	Y	§5.B.6.b. Restaurant/Cafe/Bakery
Formula Eating & Drinking Establishment	SP	SP	§5.B.6.c. Formula Eating and/or Drinking Establishment
INDUSTRIAL			
Commercial Dry Cleaning & Laundry Services	SP	N	§5.B.7.a. Commercial Dry Cleaning & Laundry Services
Data Center	N	N	§5.B.7.b. Data Center
Industrial Manufacturing	N	N	§5.B.7.c. Industrial Manufacturing
Moving and/or Self Storage	N	N	§5.B.7.d. Moving & Self Storage
Recycling Collection	N	N	§5.B.7.e. Recycling Collection
Salvage Yard	N	N	§5.B.7.f. Salvage Yard
Trucking and Transportation Depot	SP	SP	§5.B.7.g. Trucking & Transportation Depot
Wholesale Trade & Distribution	L	L	§5.B.7.h. Wholesale Trade & Distribution
LODGING			
Bed & Breakfast	N	N	§5.B.8.a. Bed & Breakfast
Hotel	N	SP	§5.B.8.b. Hotel or Hostel
Short Term Rental of a Dwelling Unit	N	N	§5.B.8.c. Short Term Rental of a Dwelling Unit
OFFICE			
Co-Working	Y	Y	§5.B.9.a. Co-Working
General Office	Y	Y	§5.B.9.b. General Office
Research and Development and/or Laboratory	Y	Y	§5.B.9.c. Research & Development and/or Laboratory
RESIDENTIAL			
Household Living	N	SP	§5.B.10.a. Household Living
Group Living (except as noted below)	N	N	§5.B.10.b. Group Living
Community or Group Residence	N	Y	§5.B.10.b.i. Community or Group Residence

TABLE 4.4 Principal Uses in BB-SD

Y - by Right
L - by Right with Limitations
SP - by Special Permit
N - NOT Permitted

	Base Uses	Subsequent to a LDP or NDP	Use Specific Regulations and/or Performance Standards
RESIDENTIAL (CONT.)			
Dormitory, Fraternity or Sorority	N	N	§5.B.10.b.ii. Dormitory, Fraternity, or Sorority
Homeless Shelter	N	N	§5.B.10.b.iii. Homeless Shelter
Nursing Home/Assisted Living Facility	N	N	§5.B.10.b.iv. Nursing Home/Assisted Living
Single Room Occupancy Housing	N	N	§5.B.10.b.v. Single Room Occupancy Housing (SRO)
RETAIL SALES			
Building/Home Supplies & Equipment	Y	Y	§5.B.11.a. Building/Home Supplies & Equipment
Consumer Goods (except as noted below)	L	L	§5.B.11.b. Consumer Goods
Drug Paraphernalia Store	N	N	§5.B.11.b.ii. Drug Paraphernalia Store
Firearms	N	N	§5.B.11.b.iii. Firearms
Packaged Liquor	N	N	§5.B.11.b.iv. Packaged Liquor
Medical Marijuana	N	N	§5.B.11.b.v. Medical Marijuana Facility
Pet Store	SP	SP	§5.B.11.b.vi. Pet Store
Formula Retail	SP	SP	§5.B.11.c. Formula Retail
Fresh Food Market and/or Grocery Store	SP	SP	§5.B.11.d. Fresh Food Market or Grocery Store
Farm/Vendor Market	Y	Y	§5.B.11.e. Farmer/Vendor Market
URBAN AGRICULTURE			
Farming (as noted below)	--	--	§5.B.12.a. Farming
Commercial Farm	Y	Y	§5.B.12.a.i. Commercial Farming
Community Farm	Y	Y	§5.B.12.a.ii. Community Farming
Community Gardening	Y	Y	§5.B.12.b. Community Gardening

C. GRAND JUNCTION (GJ-SD)

GRAPHIC STILL IN PRODUCTION

1. INTENT

a. To accommodate a neighborhood of mixed-use, moderate- to high-density, transit-oriented development with the following characteristics:
   i. An interconnected street grid and comprehensive thoroughfare network that includes new streets and alleys.
   ii. Appealing physical connections to Boynton Yards and the East Cambridge and North Point neighborhoods in Cambridge.
   iii. A distribution of diverse civic space types to serve the various social needs of neighborhood residents, workers, and visitors, including a central plaza.
   iv. A diverse mix of uses focused on office, research & development, fabrication, production, and, to a lesser extent, residential and support retail uses.
   v. Commercial building types that do not exceed eleven (11) stories in height and apartment and mixed-use building types that do not exceed five (5) stories in height.
   vi. Architectural and landscape design that spatially defines civic spaces and thoroughfares as outdoor rooms and corridors.

2. PURPOSE

a. To incentivize the coordinated planning of development in the Grand Junction Special District at multiple scales
b. To require a mix of uses consistent with the objectives of the comprehensive Master Plan of the City of Somerville
c. To ensure site planning that does not preclude connections to a potential transit station along the Grand Junction rail line or any extension of the Grand Junction community path.
d. To permit the development of commercial building types.
e. To permit the development of mixed use building types following the approval of a neighborhood development plan or large development plan.
f. To use discretion in the permitting of residential uses.
g. To promote diversity in housing, including unit type, size, bedroom count, and affordability.

3. APPLICABILITY

a. Where the provisions of this Section conflict with those found elsewhere in this Ordinance, the provisions of this Section shall apply.

4. DEVELOPMENT PLANNING

a. Development Sites
   i. Development sites of ten (10) or more acres in land area require neighborhood development plan approval as a prerequisite to other development review and permitting.
   ii. Development sites are not permitted to include portions of land area separated by more than 100 feet in distance.
   iii. Development sites are not permitted to include land area which is part of a separate large development plan.
   iv. Ownership of a development site need not be in common, but all landowners must consent to the plan.

b. Subdivision
   i. The subdivision of a development site and the construction of thoroughfares is prohibited prior to the approval of a neighborhood development plan.

c. Build-Out
   i. A minimum of five percent (5%) of the total gross floor area of development subject to a neighborhood development plan must be provided as leasable floor area for uses from the Arts & Creative Enterprise use category.
   ii. At full build-out, no less than sixty-five percent (65%) of the total gross floor area of development subject to a neighborhood development plan or large development plan must be provided to commercial uses.

d. Phasing
   i. Neighborhood development plans must include a development phasing program indicating the expected sequence of development within the plan area.
   ii. Development phasing must include a strategy for the delivery of required civic space and arts & creative enterprise uses prior to, or in conjunction with, the completion of other development.

5. PUBLIC REALM STANDARDS

a. Urban Design
   i. The following standards supersede the provisions of §8.B. Urban Design.
      a). Blocks
         i). Blocks must have individual block faces no greater than five-hundred (500) feet and a total perimeter no greater than seventeen-hundred (1,700) feet.

b. Civic Space
   i. At least five percent (05%) of the total land area of a development site subject to neighborhood development plan approval must be designed as publicly accessible civic space. See §8.C. Civic & Recreation Spaces.
   ii. Civic space provided must be distributed as a series of separate spaces of various types and sizes throughout the development site.

6. BUILDING STANDARDS

a. The following building types are permitted by-right and require only a zoning permit:
   i. Commercial Building

b. Subject to an approved neighborhood development plan, the following building types require site development plan approval as a prerequisite to the issuance of a zoning permit:
   i. Mixed-Use Building

7. PRINCIPAL BUILDING TYPES

a. Commercial Building

A multi-story building type with ground story commercial and upper story non-residential uses.

i. Lot Standards

ii. Placement

LOT DIMENSIONS		
A Width (min/max)	30 ft.	150 ft.
A Subsequent to a NDP	30 ft.	200 ft.
Depth (min)	40 ft.	
Subsequent to a NDP	100 ft.	
Area (max)	20,000 sq. ft.	
Subsequent to a NDP	45,000 sq. ft.	

LOT COVERAGE	
A Permeable Surface	10%

BUILDING SETBACKS		
A Primary Front Setback (min/max)	2 feet	15 feet
A Secondary Front Setback (min/max)	2 feet	15 feet
Side Setback (min)	0 ft.	
Side Setback Abutting NR (min)	5 ft.	
A Rear Setback (min)	10 ft.	
A Rear Setback Abutting NR (min)	15 ft.	

PARKING SETBACKS	
A Primary Front Setback (min)	--
A Surface Parking	20 feet
Structured Parking	20 feet
Secondary Front Setback (min)	--
Surface Parking	10 feet
Structured Parking	2 feet

Commercial Building (cont.)
A multi-story building type with ground story commercial and upper story non-residential uses.

iii. Height & Massing

MAIN BODY	
J Facade Build Out (min)	80%
K Floor Plate (max)	15,000 sq. ft.
Subsequent to a NDP	--
Up to 5 stories (max)	40,000 sq. ft.
Above 5 stories (max)	20,000 sq. ft.
M Building Height (max)	3 stories (45 ft.)
Subsequent to a NDP	20 stories (270 ft.)
Ground Story Height (min)	14 feet
Upper Story Height (min)	9 feet

PERMITTED BUILDING COMPONENTS	
Awning	See X.x.x
Entry Canopy	See X.x.x
Bay	See X.x.x
Balcony	See X.x.x

iv. Uses & Features

FACADE COMPOSITION	
N Ground Story Fenestration (min)	70%
O Upper Story Fenestration (min/max)	20% min 50% max.
Blank Wall (max)	20 ft.

PERMITTED BUILDING FRONTAGE	(1 required)
Forecourt	See X.x.x
Lobby Entrance	See X.x.x
Storefront	See X.x.x
Terrace	See X.x.x
Lightwell	See X.x.x

PEDESTRIAN ACCESS	
Principal Entrance Spacing (min)	n/a
Subsequent to a LDP or NDP	30 ft.

USE & OCCUPANCY	
Leasable Space Depth (min)	30 feet
Ground Story Use	Any Commercial
Upper Story Use	Any Commercial

b. Mixed-Use Building

A multi-story building type with ground story commercial and upper story non-residential uses.

i. Lot Standards

ii. Placement

LOT DIMENSIONS		
A Width (min/max)	30 ft.	150 ft.
A Subsequent to a NDP	30 ft.	200 ft.
Depth (min)	40 ft.	
Subsequent to a NDP	100 ft.	
Area (max)	20,000 sq. ft.	
Subsequent to a NDP	45,000 sq. ft.	

LOT COVERAGE	
A Permeable Surface	10%

BUILDING SETBACKS		
A Primary Front Setback (min/max)	2 feet	15 feet
A Secondary Front Setback (min/max)	2 feet	15 feet
Side Setback (min)	0 ft.	
Side Setback Abutting NR (min)	5 ft.	
A Rear Setback (min)	10 ft.	
A Rear Setback Abutting NR (min)	15 ft.	

PARKING SETBACKS	
A Primary Front Setback (min)	--
A Surface Parking	20 feet
Structured Parking	20 feet
Secondary Front Setback (min)	--
Surface Parking	10 feet
Structured Parking	2 feet

Commercial Building (cont.)

A multi-story building type with ground story commercial and upper story non-residential uses.

iii. Height & Massing

iv. Uses & Features

GRAPHIC STILL IN PRODUCTION

place holder

GRAPHIC STILL IN PRODUCTION

place holder

MAIN BODY	
J Facade Build Out (min)	80%
K Floor Plate (max)	15,000 sq. ft.
Subsequent to a NDP	--
Up to 5 stories (max)	40,000 sq. ft.
Above 5 stories (max)	20,000 sq. ft.
M Building Height (max)	3 stories (45 ft.)
Subsequent to a NDP	20 stories (270 ft.)
Ground Story Height (min)	14 feet
Upper Story Height (min)	9 feet

PERMITTED BUILDING COMPONENTS	
Awning	See X.x.x
Entry Canopy	See X.x.x
Bay	See X.x.x
Balcony	See X.x.x

FACADE COMPOSITION	
N Ground Story Fenestration (min)	70%
O Upper Story Fenestration (min/max)	20% min 50% max.
Blank Wall (max)	20 ft.

PERMITTED BUILDING FRONTAGE	(1 required)
Forecourt	See X.x.x
Lobby Entrance	See X.x.x
Storefront	See X.x.x
Terrace	See X.x.x
Lightwell	See X.x.x

PEDESTRIAN ACCESS	
Principal Entrance Spacing (min)	n/a
Subsequent to a NDP	30 ft.

USE & OCCUPANCY	
Leasable Space Depth (min)	30 feet
Ground Story Use	Commercial
Upper Story Use	Residential
Average Dwelling Unit Size (min)	900 sq. ft.

8. USE PROVISIONS

a. The use of real property is regulated according to Table 4.5 Principal Uses in GJ-SD.
b. Uses from the following accessory use categories are permitted by-right or by-right with limitations subject to the standards for each specific use, as applicable:
    i. Home Occupations
        a). Family Day Care
        b). Home Office
    ii. Lodging
    iii. Urban Agriculture
    iv. Vehicular Parking

9. DEVELOPMENT REVIEW

a. Authority
    i. The Planning Board is the review board for all development review in the GJ-SD, except for variances.
b. Administrative Development Review
    i. Subdivision of a development site requires the approval of a subdivision plan in accordance with the provisions of §10.C.8. Subdivision Plan Approval.
        a). During its review, the Planning Board shall verify that the submitted plan conforms to the following:
            i). the review considerations for all Subdivision Plan Approval as specified in §10.C.8.e. Review Criteria; and
            ii). any approved large development plan or neighborhood development plan governing the subject property, as applicable.
    ii. Building types permitted "by-right" require only a zoning permit in accordance with the provisions of §10.C.1. Zoning Permit.
    iii. Thoroughfares, civic spaces, and building types permitted by "site development plan" require site development plan approval in accordance with the provisions of §10.C.5. Site Development Plan Approval as a prerequisite to a the issuance of a zoning permit.
        a). During its review, the Planning Board shall verify that the submitted plan conforms to the following:
            i). the review considerations for all Site Development Plans as specified in §10.C.5.e. Review Criteria;
            ii). any approved large development plan or neighborhood development plan governing the subject property, as applicable; and
            iii). recommendations of the Urban Design Commission (UDC).
c. Discretionary Development Review
    i. Building types and uses permitted "by Special Permit" require a special permit in accordance with §10.D.1. Special Permit as a prerequisite to a the issuance of a zoning permit.
        a). During its review, the Planning Board shall verify that the submitted plan conforms to the following:
            i). The review considerations for all Special Permits as specified in §10.D.1.e. Review Criteria;
            ii). any approved large development plan or neighborhood development plan governing the subject property, as applicable; and
            iii). recommendations of the Urban Design Commission (UDC).

TABLE 4.5 Principal Uses in GJ-SD

Y - by Right
L - by Right with Limitations
SP - by Special Permit
N - NOT Permitted

	Base Uses	Subsequent to a LDP or NDP	Use Specific Regulations and/or Performance Standards
ARTS & CREATIVE ENTERPRISE			
Artisan Production	Y	Y	§5.B.2.a. Artisan Production
Arts Exhibition	Y	Y	§5.B.2.b. Arts Exhibition
Arts Sales & Services	Y	Y	§5.B.2.c. Arts Sales & Services
Creative Studio	Y	Y	§5.B.2.d. Creative Studio
Design Services	Y	Y	§5.B.2.e. Design Services
Shared Workspaces & Arts Education	Y	Y	§5.B.2.f. Shared Workspaces & Arts Education
Work/Live Creative Studio	SP	SP	§5.B.2.g. Work/Live Creative Studio
AUTO-ORIENTED			
Commercial Vehicle Repair & Maintenance	SP	SP	§5.B.3.a. Commercial Vehicle Repair & Maintenance
Dispatch Service (except as noted below)	SP	SP	§5.B.3.b. Dispatch Service
Towing Service	N	N	§5.B.3.b.i. Towing Service
Gasoline Station	N	N	§5.B.3.c. Gasoline Station
Motor Vehicle Parking (as noted below)	--	--	§5.B.3.d. Motor Vehicle Parking
Car Share Parking	Y	Y	§5.B.3.d.i. Car-Share Parking
Commercial Parking	SP	SP	§5.B.3.d.ii. Commercial Parking
Off-Site Accessory Parking	SP	SP	§5.B.3.d.iii. Off-Site Accessory Parking
Personal Vehicle Repair & Maintenance	SP	SP	§5.B.3.e. Personal Vehicle Repair & Maintenance
Vehicle Sales	SP	SP	§5.B.3.f. Vehicle Sales
CIVIC & INSTITUTIONAL			
Community Center	Y	Y	§5.B.4.a. Community Center
Educational Facility	Y	Y	§5.B.4.b. Educational Facility
Hospital	SP	SP	§5.B.4.c. Hospital
Library	Y	Y	§5.B.4.d. Library
Minor Utility Facility	SP	N	§5.B.4.e. Minor Utility Facility
Major Utility Facility	N	N	§5.B.4.f. Major Utility Facility
Museum	Y	Y	§5.B.4.g. Museum
Private Non-Profit Club or Lodge	SP	SP	§5.B.4.h. Private, Non-Profit Club or Lodge
COMMERCIAL SERVICES			
Animal Services (as noted below)	--	--	§5.B.5.a. Animal Services
Pet Grooming	Y	Y	§5.B.5.a.i. Pet Grooming
Pet Training, Care, or Shelter	Y	Y	§5.B.5.a.ii. Pet Training, Care, or Shelter
Veterinarian	Y	Y	§5.B.5.a.iv. Veterinarian
Assembly & Entertainment	SP	SP	§5.B.5.b. Assembly and Entertainment
Banking & Financial Services (except as noted below)	Y	Y	§5.B.5.c. Banking & Financial Services
Personal Credit	N	N	§5.B.5.c.i. Personal Credit
Broadcast and/or Recording Studio	Y	Y	§5.B.5.d. Broadcast and/or Recording Studio
Building & Home Repair Services	SP	N	§5.B.5.e. Building & Home Repair Services

TABLE 4.5 Principal Uses in GJ-SD

Y - by Right
L - by Right with Limitations
SP - by Special Permit
N - NOT Permitted

	Base Uses	Subsequent to a LDP or NDP	Use Specific Regulations and/or Performance Standards
COMMERCIAL SERVICES (CONT.)			
Business Support Services	Y	Y	§5.B.5.f. Business Support Services
Caterer/Wholesale Food Production	Y	Y	§5.B.5.g. Caterer/Wholesale Food Production
Day Care Service (as noted below)	--	--	§5.B.5.h. Day Care Service
Adult Day Care Center	L	L	§5.B.5.h.i. Adult Day Care Center
Child Day Care Center	Y	Y	§5.B.5.h.ii. Child Day Care Center
Maintenance & Repair of Consumer Goods	Y	Y	§5.B.5.i. Maintenance & Repair of Consumer Goods
Personal Services (except as noted below)	Y	Y	§5.B.5.j. Personal Services
Body-Art Establishment	SP	SP	§5.B.5.j.i. Body Art
Gym or Health Club	SP	SP	§5.B.5.j.ii. Gym or Health Club
Funeral Home	SP	SP	§5.B.5.j.iii. Funeral Home
Health Care Provider	SP	SP	§5.B.5.j.iv. Health Care Provider
Recreation Facility	SP	SP	§5.B.5.k. Recreation Facility
EATING AND DRINKING			
Bar or Tavern	SP	SP	§5.B.6.a. Bar or Tavern
Restaurant, Café, Bakery	Y	Y	§5.B.6.b. Restaurant/Cafe/Bakery
Formula Eating & Drinking Establishment	SP	SP	§5.B.6.c. Formula Eating and/or Drinking Establishment
INDUSTRIAL			
Commercial Dry Cleaning & Laundry Services	SP	N	§5.B.7.a. Commercial Dry Cleaning & Laundry Services
Data Center	N	N	§5.B.7.b. Data Center
Industrial Manufacturing	N	N	§5.B.7.c. Industrial Manufacturing
Moving and/or Self Storage	N	N	§5.B.7.d. Moving & Self Storage
Recycling Collection	N	N	§5.B.7.e. Recycling Collection
Salvage Yard	N	N	§5.B.7.f. Salvage Yard
Trucking and Transportation Depot	SP	N	§5.B.7.g. Trucking & Transportation Depot
Wholesale Trade & Distribution	L	N	§5.B.7.h. Wholesale Trade & Distribution
LODGING			
Bed & Breakfast	N	N	§5.B.8.a. Bed & Breakfast
Hotel	N	SP	§5.B.8.b. Hotel or Hostel
Short Term Rental of a Dwelling Unit	N	N	§5.B.8.c. Short Term Rental of a Dwelling Unit
OFFICE			
Co-Working	Y	Y	§5.B.9.a. Co-Working
General Office	Y	Y	§5.B.9.b. General Office
Research and Development and/or Laboratory	Y	Y	§5.B.9.c. Research & Development and/or Laboratory
RESIDENTIAL			
Household Living	N	SP	§5.B.10.a. Household Living
Group Living (except as noted below)	N	N	§5.B.10.b. Group Living
Community or Group Residence	N	Y	§5.B.10.b.i. Community or Group Residence

TABLE 4.5 Principal Uses in GJ-SD

Y - by Right
L - by Right with Limitations
SP - by Special Permit
N - NOT Permitted

	Base Uses	Subsequent to a LDP or NDP	Use Specific Regulations and/or Performance Standards
RESIDENTIAL (CONT.)			
Dormitory, Fraternity or Sorority	N	N	§5.B.10.b.ii. Dormitory, Fraternity, or Sorority
Homeless Shelter	N	N	§5.B.10.b.iii. Homeless Shelter
Nursing Home/Assisted Living Facility	N	N	§5.B.10.b.iv. Nursing Home/Assisted Living
Single Room Occupancy Housing	N	N	§5.B.10.b.v. Single Room Occupancy Housing (SRO)
RETAIL SALES			
Building/Home Supplies & Equipment	Y	Y	§5.B.11.a. Building/Home Supplies & Equipment
Consumer Goods (except as noted below)	L	L	§5.B.11.b. Consumer Goods
Drug Paraphernalia Store	N	N	§5.B.11.b.ii. Drug Paraphernalia Store
Firearms	N	N	§5.B.11.b.iii. Firearms
Packaged Liquor	N	N	§5.B.11.b.iv. Packaged Liquor
Medical Marijuana	N	N	§5.B.11.b.v. Medical Marijuana Facility
Pet Store	SP	SP	§5.B.11.b.vi. Pet Store
Formula Retail	SP	SP	§5.B.11.c. Formula Retail
Fresh Food Market and/or Grocery Store	SP	SP	§5.B.11.d. Fresh Food Market or Grocery Store
Farm/Vendor Market	Y	Y	§5.B.11.e. Farmer/Vendor Market
URBAN AGRICULTURE			
Farming (as noted below)	--	--	§5.B.12.a. Farming
Commercial Farm	Y	Y	§5.B.12.a.i. Commercial Farming
Community Farm	Y	Y	§5.B.12.a.ii. Community Farming
Community Gardening	Y	Y	§5.B.12.b. Community Gardening

D. INNER BELT (IB-SD)

GRAPHIC STILL IN PRODUCTION

1. INTENT

a. To accommodate a neighborhood of mixed-use, high-density transit-oriented development with the following characteristics:
   i. An interconnected street grid and comprehensive thoroughfare network that includes new streets and alleys.
   ii. Appealing physical connections to the Washington Street Green Line Station, East Somerville, the North Point neighborhood in Cambridge, the Roland Street neighborhood in Boston, and regional pathways.
   iii. Upgraded physical connections across the Lowell commuter rail link embankment.
   iv. A distribution of diverse civic space types to serve the various social needs of neighborhood residents, workers, and visitors, including a public common.
   v. A diverse mix of uses including commercial industry, fabrication, production, office, research & development, and residential uses.
   vi. Primary uses distributed throughout the neighborhood so that the many activities of daily living can occur within walking distance to residences and workplaces.
   vii. Medium-scale building types that do not exceed 7 stories fronting on Washington Street and New Washington Street and large-scale building types that do not exceed 20 stories.
   viii. Architectural and landscape design that spatially defines civic spaces and thoroughfares as outdoor rooms and corridors.

2. PURPOSE

a. To incentivize the coordinated planning of development in Innerbelt at multiple scales
b. To require a mix of uses consistent with the objectives of the comprehensive Master Plan of the City of Somerville
c. To permit the development of commercial building types.
d. To permit the development of mixed use building types following the approval of a neighborhood development plan or large development plan.
e. To use discretion in the permitting of residential uses.
f. To promote diversity in housing, including unit type, size, bedroom count, and affordability.

3. APPLICABILITY

a. Where the provisions of this Section conflict with those found elsewhere in this Ordinance, the provisions of this Section shall apply.

4. DEVELOPMENT PLANNING

a. Development Sites
   i. Development sites of eight (8) or more acres in land area require large development plan approval as a prerequisite to other development review and permitting.
   ii. Development sites of twenty (20) or more acres in land area require neighborhood development plan approval as a prerequisite to other development review and permitting.
   iii. Development sites are not permitted to include portions of land area separated by more than 100 feet in distance.
   iv. Development sites are not permitted to include land area which is part of a separate large development plan.
   v. Ownership of a development site need not be in common, but all landowners must consent to the plan.

b. Subdivision
   i. The subdivision of a development site and the construction of thoroughfares is prohibited prior to the approval of a neighborhood development plan or a large development plan.

c. Build-Out
   i. A minimum of five percent (5%) of the total gross floor area of development subject to a neighborhood development plan or large development plan must be provided as leasable floor area for uses from the Arts & Creative Enterprise use category.
   ii. At full build-out, no less than sixty-five percent (65%) of the total gross floor area of development subject to a neighborhood development plan or large development plan must be provided to commercial uses.

d. Phasing
   i. Neighborhood development plans and large development plans must include a development phasing program indicating the expected sequence of development within the plan area.
   ii. Development phasing must include a strategy for the delivery of required civic space and arts & creative enterprise uses prior to, or in conjunction with, the completion of other development.

5. PUBLIC REALM STANDARDS

a. Civic Space
   i. At least twelve and a half percent (12.5%) of the total land area of a development site subject to large development plan approval or neighborhood development plan approval must be designed as publicly accessible civic space. See §8.C. Civic & Recreation Spaces.
   ii. Civic space provided must be distributed as a series of separate spaces of various types and sizes throughout the development site.

6. BUILDING STANDARDS

a. The following building types are permitted by-right and require only a zoning permit:
   i. Commercial Building

b. Subject to an approved neighborhood development plan or large development plan, the following building types require site development plan approval as a prerequisite to the issuance of a zoning permit:
   i. Mixed-Use Building

7. PRINCIPAL BUILDING TYPES

a. Commercial Building

A multi-story building type with ground story commercial and upper story non-residential uses.

i. Lot Standards

ii. Placement

LOT DIMENSIONS		
A Width (min/max)	30 ft.	150 ft.
A Subsequent to a LDP or NDP	30 ft.	200 ft.
Depth (min)	40 ft.	
Subsequent to a LDP or NDP	100 ft.	
Area (max)	20,000 sq. ft.	
Subsequent to a LDP or NDP	45,000 sq. ft.	

LOT COVERAGE	
A Permeable Surface	10%

BUILDING SETBACKS		
A Primary Front Setback (min/max)	2 feet	15 feet
A Secondary Front Setback (min/max)	2 feet	15 feet
Side Setback (min)	0 ft.	
Side Setback Abutting NR (min)	5 ft.	
A Rear Setback (min)	10 ft.	
A Rear Setback Abutting NR (min)	15 ft.	

PARKING SETBACKS	
A Primary Front Setback (min)	--
A Surface Parking	20 feet
Structured Parking	20 feet
Secondary Front Setback (min)	--
Surface Parking	10 feet
Structured Parking	2 feet

Commercial Building (cont.)
A multi-story building type with ground story commercial and upper story non-residential uses.

iii. Height & Massing

MAIN BODY	
J Facade Build Out (min)	80%
K Floor Plate (max)	15,000 sq. ft.
Subsequent to a LDP or NDP	--
Up to 5 stories (max)	40,000 sq. ft.
Above 5 stories (max)	20,000 sq. ft.
M Building Height (max)	3 stories (45 ft.)
Subsequent to a LDP or NDP	20 stories (270 ft.)
Ground Story Height (min)	14 feet
Upper Story Height (min)	9 feet

PERMITTED BUILDING COMPONENTS	
Awning	See X.x.x
Entry Canopy	See X.x.x
Bay	See X.x.x
Balcony	See X.x.x

iv. Uses & Features

FACADE COMPOSITION	
N Ground Story Fenestration (min)	70%
O Upper Story Fenestration (min/max)	20% min 50% max.
Blank Wall (max)	20 ft.

PERMITTED BUILDING FRONTAGE	(1 required)
Forecourt	See X.x.x
Lobby Entrance	See X.x.x
Storefront	See X.x.x
Terrace	See X.x.x
Lightwell	See X.x.x

PEDESTRIAN ACCESS	
Principal Entrance Spacing (min)	n/a
Subsequent to a LDP or NDP	30 ft.

USE & OCCUPANCY	
Leasable Space Depth (min)	30 feet
Ground Story Use	Any Commercial
Upper Story Use	Any Commercial

b. Mixed-Use Building

A multi-story building type with ground story commercial and upper story non-residential uses.

i. Lot Standards

ii. Placement

LOT DIMENSIONS		
A Width (min/max)	30 ft.	150 ft.
A Subsequent to a LDP or NDP	30 ft.	200 ft.
Depth (min)	40 ft.	
Subsequent to a LDP or NDP	100 ft.	
Area (max)	20,000 sq. ft.	
Subsequent to a LDP or NDP	45,000 sq. ft.	

LOT COVERAGE	
A Permeable Surface	10%

BUILDING SETBACKS		
A Primary Front Setback (min/max)	2 feet	15 feet
A Secondary Front Setback (min/max)	2 feet	15 feet
Side Setback (min)	0 ft.	
Side Setback Abutting NR (min)	5 ft.	
A Rear Setback (min)	10 ft.	
A Rear Setback Abutting NR (min)	15 ft.	

PARKING SETBACKS	
A Primary Front Setback (min)	--
A Surface Parking	20 feet
Structured Parking	20 feet
Secondary Front Setback (min)	--
Surface Parking	10 feet
Structured Parking	2 feet

Commercial Building (cont.)
A multi-story building type with ground story commercial and upper story non-residential uses.

iii. Height & Massing

GRAPHIC STILL
place holder
IN PRODUCTION

MAIN BODY	
J Facade Build Out (min)	80%
K Floor Plate (max)	15,000 sq. ft.
Subsequent to a LDP or NDP	--
Up to 5 stories (max)	40,000 sq. ft.
Above 5 stories (max)	20,000 sq. ft.
M Building Height (max)	3 stories (45 ft.)
Subsequent to a LDP or NDP	20 stories (270 ft.)
Ground Story Height (min)	14 feet
Upper Story Height (min)	9 feet

PERMITTED BUILDING COMPONENTS	
Awning	See X.x.x
Entry Canopy	See X.x.x
Bay	See X.x.x
Balcony	See X.x.x

iv. Uses & Features

GRAPHIC STILL
place holder
IN PRODUCTION

FACADE COMPOSITION	
N Ground Story Fenestration (min)	70%
O Upper Story Fenestration (min/max)	20% min 50% max.
Blank Wall (max)	20 ft.

PERMITTED BUILDING FRONTAGE	(1 required)
Forecourt	See X.x.x
Lobby Entrance	See X.x.x
Storefront	See X.x.x
Terrace	See X.x.x
Lightwell	See X.x.x

PEDESTRIAN ACCESS	
Principal Entrance Spacing (min)	n/a
Subsequent to a LDP or NDP	30 ft.

USE & OCCUPANCY	
Leasable Space Depth (min)	30 feet
Ground Story Use	Commercial
Upper Story Use	Residential
Average Dwelling Unit Size (min)	900 sq. ft.

8. USE PROVISIONS

a. The use of real property is regulated according to Table 4.5 Principal Uses in IB-SD.
b. Uses from the following accessory use categories are permitted by-right or by-right with limitations subject to the standards for each specific use, as applicable:
    i. Home Occupations
        a). Family Day Care
        b). Home Office
    ii. Lodging
    iii. Urban Agriculture
    iv. Vehicular Parking

9. DEVELOPMENT REVIEW

a. Authority
    i. The Planning Board is the review board for all development review in the BB-SD, except for variances.
b. Administrative Development Review
    i. Subdivision of a development site requires the approval of a subdivision plan in accordance with the provisions of §10.C.8. Subdivision Plan Approval.
        a). During its review, the Planning Board shall verify that the submitted plan conforms to the following:
            i). the review considerations for all Subdivision Plan Approval as specified in §10.C.8.e. Review Criteria; and
            ii). any approved large development plan or neighborhood development plan governing the subject property, as applicable.
    ii. Building types permitted "by-right" require only a zoning permit in accordance with the provisions of §10.C.1. Zoning Permit.
    iii. Thoroughfares, civic spaces, and building types permitted by "site development plan" require site development plan approval in accordance with the provisions of §10.C.5. Site Development Plan Approval as a prerequisite to a the issuance of a zoning permit.
        a). During its review, the Planning Board shall verify that the submitted plan conforms to the following:
            i). the review considerations for all Site Development Plans as specified in §10.C.5.e. Review Criteria;
            ii). any approved large development plan or neighborhood development plan governing the subject property, as applicable; and
            iii). recommendations of the Urban Design Commission (UDC).
c. Discretionary Development Review
    i. Building types and uses permitted "by Special Permit" require a special permit in accordance with §10.D.1. Special Permit as a prerequisite to a the issuance of a zoning permit.
        a). During its review, the Planning Board shall verify that the submitted plan conforms to the following:
            i). The review considerations for all Special Permits as specified in §10.D.1.e. Review Criteria;
            ii). any approved large development plan or neighborhood development plan governing the subject property, as applicable; and
            iii). recommendations of the Urban Design Commission (UDC).

TABLE 4.6 Principal Uses in IB-SD

Y - by Right
L - by Right with Limitations
SP - by Special Permit
N - NOT Permitted

	Base Uses	Subsequent to a LDP or NDP	Use Specific Regulations and/or Performance Standards
ARTS & CREATIVE ENTERPRISE			
Artisan Production	Y	Y	§5.B.2.a. Artisan Production
Arts Exhibition	Y	Y	§5.B.2.b. Arts Exhibition
Arts Sales & Services	Y	Y	§5.B.2.c. Arts Sales & Services
Creative Studio	Y	Y	§5.B.2.d. Creative Studio
Design Services	Y	Y	§5.B.2.e. Design Services
Shared Workspaces & Arts Education	Y	Y	§5.B.2.f. Shared Workspaces & Arts Education
Work/Live Creative Studio	SP	SP	§5.B.2.g. Work/Live Creative Studio
AUTO-ORIENTED			
Commercial Vehicle Repair & Maintenance	SP	SP	§5.B.3.a. Commercial Vehicle Repair & Maintenance
Dispatch Service (except as noted below)	SP	SP	§5.B.3.b. Dispatch Service
Towing Service	N	N	§5.B.3.b.i. Towing Service
Gasoline Station	N	N	§5.B.3.c. Gasoline Station
Motor Vehicle Parking (as noted below)	--	--	§5.B.3.d. Motor Vehicle Parking
Car Share Parking	Y	Y	§5.B.3.d.i. Car-Share Parking
Commercial Parking	SP	SP	§5.B.3.d.ii. Commercial Parking
Off-Site Accessory Parking	SP	SP	§5.B.3.d.iii. Off-Site Accessory Parking
Personal Vehicle Repair & Maintenance	SP	SP	§5.B.3.e. Personal Vehicle Repair & Maintenance
Vehicle Sales	SP	SP	§5.B.3.f. Vehicle Sales
CIVIC & INSTITUTIONAL			
Community Center	Y	Y	§5.B.4.a. Community Center
Educational Facility	Y	Y	§5.B.4.b. Educational Facility
Hospital	SP	SP	§5.B.4.c. Hospital
Library	Y	Y	§5.B.4.d. Library
Minor Utility Facility	SP	N	§5.B.4.e. Minor Utility Facility
Major Utility Facility	N	N	§5.B.4.f. Major Utility Facility
Museum	Y	Y	§5.B.4.g. Museum
Private Non-Profit Club or Lodge	SP	SP	§5.B.4.h. Private, Non-Profit Club or Lodge
COMMERCIAL SERVICES			
Animal Services (as noted below)	--	--	§5.B.5.a. Animal Services
Pet Grooming	Y	Y	§5.B.5.a.i. Pet Grooming
Pet Training, Care, or Shelter	Y	Y	§5.B.5.a.ii. Pet Training, Care, or Shelter
Veterinarian	Y	Y	§5.B.5.a.iv. Veterinarian
Assembly & Entertainment	SP	SP	§5.B.5.b. Assembly and Entertainment
Banking & Financial Services (except as noted below)	Y	Y	§5.B.5.c. Banking & Financial Services
Personal Credit	N	N	§5.B.5.c.i. Personal Credit
Broadcast and/or Recording Studio	Y	Y	§5.B.5.d. Broadcast and/or Recording Studio
Building & Home Repair Services	SP	N	§5.B.5.e. Building & Home Repair Services

TABLE 4.6 Principal Uses in IB-SD

Y - by Right
L - by Right with Limitations
SP - by Special Permit
N - NOT Permitted

	Base Uses	Subsequent to a LDP or NDP	Use Specific Regulations and/or Performance Standards
COMMERCIAL SERVICES (CONT.)			
Business Support Services	Y	Y	§5.B.5.f. Business Support Services
Caterer/Wholesale Food Production	Y	Y	§5.B.5.g. Caterer/Wholesale Food Production
Day Care Service (as noted below)	--	--	§5.B.5.h. Day Care Service
Adult Day Care Center	L	L	§5.B.5.h.i. Adult Day Care Center
Child Day Care Center	Y	Y	§5.B.5.h.ii. Child Day Care Center
Maintenance & Repair of Consumer Goods	Y	Y	§5.B.5.i. Maintenance & Repair of Consumer Goods
Personal Services (except as noted below)	Y	Y	§5.B.5.j. Personal Services
Body-Art Establishment	SP	SP	§5.B.5.j.i. Body Art
Gym or Health Club	SP	SP	§5.B.5.j.ii. Gym or Health Club
Funeral Home	SP	SP	§5.B.5.j.iii. Funeral Home
Health Care Provider	SP	SP	§5.B.5.j.iv. Health Care Provider
Recreation Facility	SP	SP	§5.B.5.k. Recreation Facility
EATING AND DRINKING			
Bar or Tavern	SP	SP	§5.B.6.a. Bar or Tavern
Restaurant, Café, Bakery	Y	Y	§5.B.6.b. Restaurant/Cafe/Bakery
Formula Eating & Drinking Establishment	SP	SP	§5.B.6.c. Formula Eating and/or Drinking Establishment
INDUSTRIAL			
Commercial Dry Cleaning & Laundry Services	SP	N	§5.B.7.a. Commercial Dry Cleaning & Laundry Services
Data Center	N	N	§5.B.7.b. Data Center
Industrial Manufacturing	N	N	§5.B.7.c. Industrial Manufacturing
Moving and/or Self Storage	N	N	§5.B.7.d. Moving & Self Storage
Recycling Collection	N	N	§5.B.7.e. Recycling Collection
Salvage Yard	N	N	§5.B.7.f. Salvage Yard
Trucking and Transportation Depot	SP	N	§5.B.7.g. Trucking & Transportation Depot
Wholesale Trade & Distribution	L	N	§5.B.7.h. Wholesale Trade & Distribution
LODGING			
Bed & Breakfast	N	N	§5.B.8.a. Bed & Breakfast
Hotel	N	SP	§5.B.8.b. Hotel or Hostel
Short Term Rental of a Dwelling Unit	N	N	§5.B.8.c. Short Term Rental of a Dwelling Unit
OFFICE			
Co-Working	Y	Y	§5.B.9.a. Co-Working
General Office	Y	Y	§5.B.9.b. General Office
Research and Development and/or Laboratory	Y	Y	§5.B.9.c. Research & Development and/or Laboratory
RESIDENTIAL			
Household Living	N	SP	§5.B.10.a. Household Living
Group Living (except as noted below)	N	N	§5.B.10.b. Group Living
Community or Group Residence	N	Y	§5.B.10.b.i. Community or Group Residence

TABLE 4.6 Principal Uses in IB-SD

Y - by Right
L - by Right with Limitations
SP - by Special Permit
N - NOT Permitted

	Base Uses	Subsequent to a LDP or NDP	Use Specific Regulations and/or Performance Standards
RESIDENTIAL (CONT.)			
Dormitory, Fraternity or Sorority	N	N	§5.B.10.b.ii. Dormitory, Fraternity, or Sorority
Homeless Shelter	N	N	§5.B.10.b.iii. Homeless Shelter
Nursing Home/Assisted Living Facility	N	N	§5.B.10.b.iv. Nursing Home/Assisted Living
Single Room Occupancy Housing	N	N	§5.B.10.b.v. Single Room Occupancy Housing (SRO)
RETAIL SALES			
Building/Home Supplies & Equipment	Y	Y	§5.B.11.a. Building/Home Supplies & Equipment
Consumer Goods (except as noted below)	L	L	§5.B.11.b. Consumer Goods
Drug Paraphernalia Store	N	N	§5.B.11.b.ii. Drug Paraphernalia Store
Firearms	N	N	§5.B.11.b.iii. Firearms
Packaged Liquor	N	N	§5.B.11.b.iv. Packaged Liquor
Medical Marijuana	N	N	§5.B.11.b.v. Medical Marijuana Facility
Pet Store	SP	SP	§5.B.11.b.vi. Pet Store
Formula Retail	SP	SP	§5.B.11.c. Formula Retail
Fresh Food Market and/or Grocery Store	SP	SP	§5.B.11.d. Fresh Food Market or Grocery Store
Farm/Vendor Market	Y	Y	§5.B.11.e. Farmer/Vendor Market
URBAN AGRICULTURE			
Farming (as noted below)	--	--	§5.B.12.a. Farming
Commercial Farm	Y	Y	§5.B.12.a.i. Commercial Farming
Community Farm	Y	Y	§5.B.12.a.ii. Community Farming
Community Gardening	Y	Y	§5.B.12.b. Community Gardening

E. NORTH POINT (NP-SD)

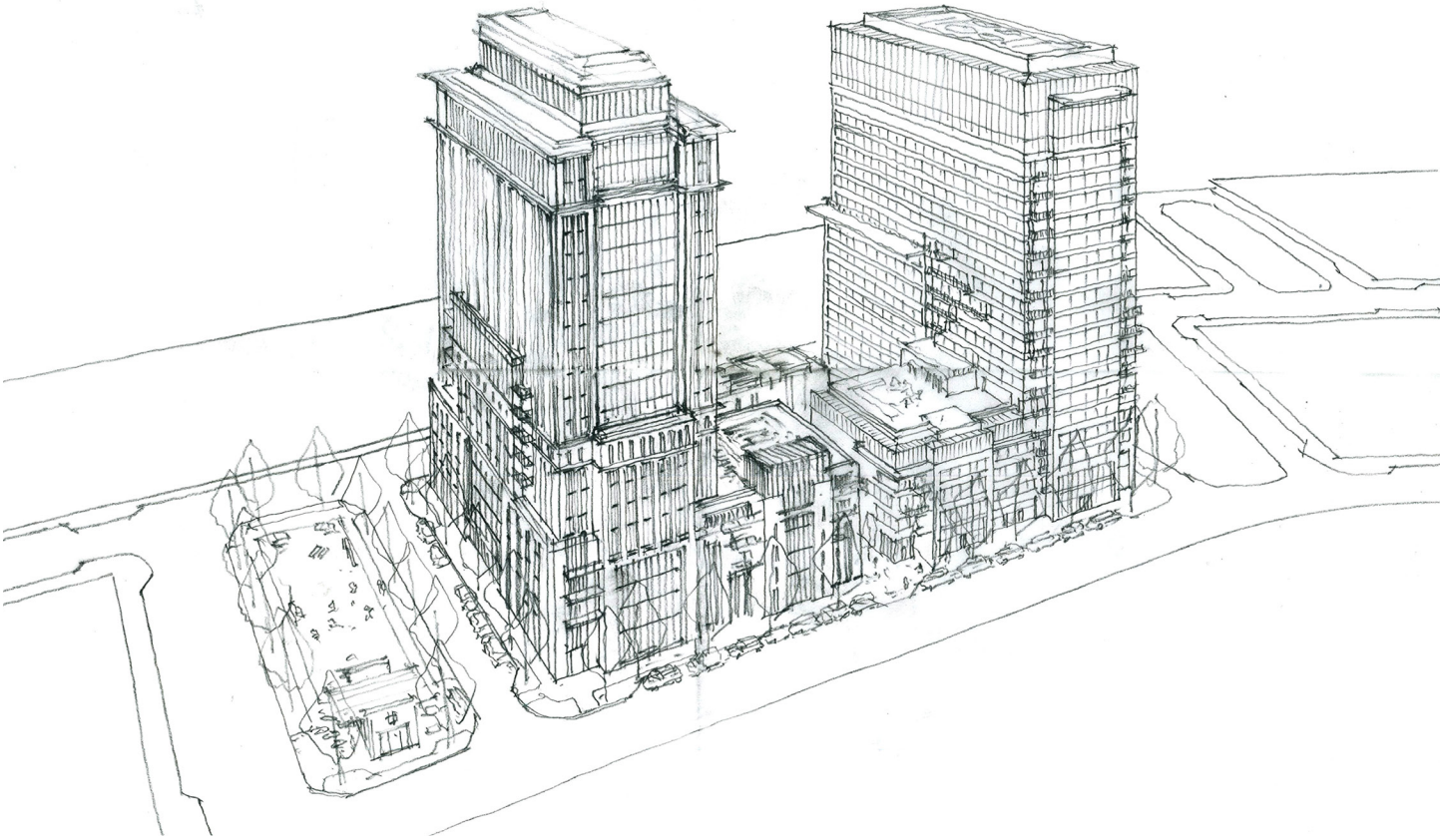

1. INTENT

a. To accommodate a neighborhood of mixed-use, moderate- to high-density development within easy walking distance to transit having the following characteristics:
   i. An interconnected street grid and comprehensive THOROUGHFARE network that distributes multi-modal circulation throughout the entire North Point neighborhood;
   ii. Appealing physical connections to surrounding areas including East Cambridge, the Community College Orange Line T-Station via the Gilmore Bridge, DCR New Charles River Basin Park, and regional pathways;
   iii. A North First Street extension as the primary connection to East Cambridge;
   iv. A distribution of diverse CIVIC SPACE types to serve the various social needs of neighborhood residents, workers, and visitors, including a PUBLIC COMMON;
   v. Large-scale building types that do not exceed two-hundred and twenty (220) feet in height.
   vi. Commercial activities that provide employment opportunities and convenient access to daily needs.
   vii. Primary uses distributed throughout the neighborhood so that the many activities of daily living can occur within walking distance to residences and workplaces;
   viii. A retail oriented PLAZA in close proximity to the relocated Lechmere T-Station; and
   ix. Architecture and landscape design that spatially defines CIVIC SPACES and THOROUGHFARES as outdoor rooms and corridors.

2. PURPOSE

a. To require the coordinated planning of development in North Point at the neighborhood scale.
b. To permit the development of mixed-use and commercial building types following the approval of a neighborhood development plan.
c. To use discretion in the permitting of residential building types and uses.
d. To require a mix of uses consistent with the objectives of the comprehensive Master Plan of the City of Somerville.
e. To constrain the supply of parking spaces to encourage the use of public transit, bicycles, and walking in lieu of motor vehicles.
f. To promote diversity in housing, including unit type, size, bedroom count, and affordability.

3. APPLICABILITY

a. Where the provisions of this Section conflict with those

found elsewhere in this Ordinance, the provisions of this Section shall apply.

4. DEVELOPMENT PLANNING

a. Build Out
   i. At full build-out of any neighborhood development plan, no less than sixty-five percent (65%) of the total gross floor area built within the City of Somerville shall be dedicated to principal uses within the Retail & Consumer Service, Commercial Office, and/or R&D and/or Laboratory use categories.
   ii. At full build-out of any neighborhood development plan, no less than three-hundred and fifty thousand (350,000) square feet of total gross floor area built within the City of Somerville shall be dedicated to principal uses within the Retail & Consumer Service, Commercial Office, and/or R&D and/or Laboratory use categories.

5. PUBLIC REALM STANDARDS

a. Urban Design
   i. The following standards supersede the provisions of Article 8: Public Realm Standards:
      a). Blocks
         i). BLOCKS must have individual BLOCK FACES no greater than five-hundred (500) feet and a total perimeter no greater than fourteen-hundred (1,400) feet.

b. Civic Space
   i. At least 5% of the total land area of a development site subject to neighborhood development plan approval must be designed as publicly accessible civic space. See §8.C. Civic & Recreation Spaces.
   ii. Civic space provided must be distributed as a series of separate spaces of various types and sizes throughout the development site.
   iii. CIVIC SPACE designed as a PUBLIC COMMON is exempt from the BLOCK perimeter restrictions of §4.E.5.a.i.a). Blocks.
   iv. CIVIC SPACES should be oriented to maximize exposure to the sun. In no case shall any portion of a CIVIC SPACE with only a NORTH-FACING exposure to the sun qualify for the land area requirement of §4.E.b. Civic Space.

c. Thoroughfares
   i. Thoroughfares designed as a close may be granted a waiver from the requirements of §8.D.3. Streets at the discretion of the Planning Board.

6. PRINCIPAL BUILDING TYPES

a. Residential High-Rise

A high-rise building type limited to residential uses on the upper floors.

i. Lot

GRAPHIC STILL IN PRODUCTION

LOT DIMENSIONS		
A Width (min/max)	30 ft.	500 ft.

ii. Placement

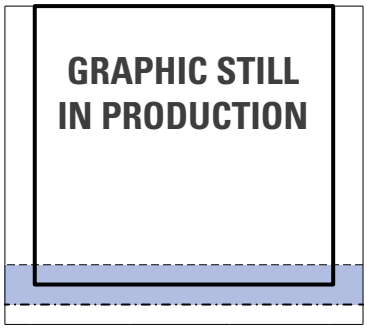

BUILDING SETBACKS		
A Primary Front Setback	0' min.	20' max.
A Secondary Front Setback	0' min.	20' max.
Side Setback (min)	0 ft.	

PARKING SETBACKS	
A Primary Front Setback (min)	20 ft.
A Secondary Front Setback (min)	20 ft.

Residential High-Rise (cont.)
A high-rise building type limited to residential uses on the upper floors.

iii. Massing & Composition

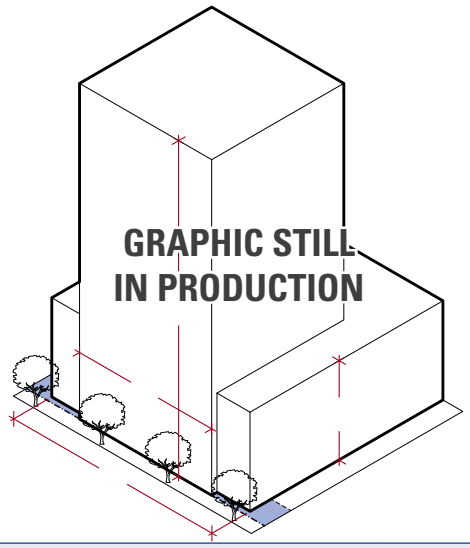

iv. Activation

GRAPHIC STILL
IN PRODUCTION

MAIN BODY	
Facade Build Out (min)	80%
Floorplate (max)	--
Up to 65 ft. (max.)	45,000 sq. ft.
Up to 220 ft. (max.)	20,000 sq. ft.
Building Height	--
Minimum	3 stories (45 ft.)
Maximum	220 ft.
Tower Horizontal Width (max)	150 ft.

PERMITTED BUILDING FRONTAGE	
Stoop	See X.x.x
Lobby Entrance	See X.x.x
Storefront	See X.x.x
Terrace	See X.x.x

PERMITTED BUILDING COMPONENTS	
Entry Canopy	See X.x.x
Balcony	See X.x.x
Balcony	See X.x.x
Bay	See X.x.x

FACADE COMPOSITION		
Ground Floor Fenestration	--	
Residential (min/max)	30%	50%
Non Residential, Primary Front (min)	65%	
Non Residential, Secondary Front (min)	50%	
Upper Floor Fenestration (min/max)	30%	50%
Blank Wall (max)	20 ft.	
Continuous Facade (max.)	100 ft.	

USE & OCCUPANCY	
Ground Floor Occupied Space Depth (min)	20 ft.
Upper Floor Use Category	Residential
Shared Amenity Space	--
Indoor	5% of Lot Area
Outdoor	5% of Lot Area
Average Dwelling Unit Size (min)	900 sq. ft.

b. Commercial High-Rise

A multi-story structure with active ground floor uses and upper floors limited to residential uses.

i. Lot

GRAPHIC STILL IN PRODUCTION

LOT DIMENSIONS		
Width (min/max)	50 ft.	500 ft.

ii. Placement

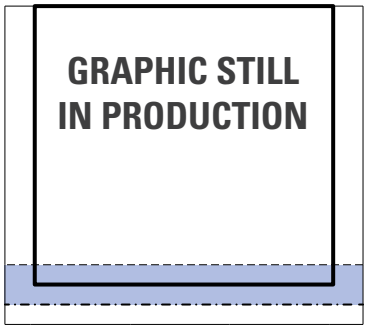

BUILDING SETBACKS		
Primary Front Setback	0' min.	20' max.
Secondary Front Setback	0' min.	20' max.
Side Setback (min)	0 ft.	

PARKING SETBACKS	
Primary Front Setback (min)	20 ft.
Secondary Front Setback (min)	20 ft.

Commercial High-Rise (cont.)
A multi-story structure with active ground floor uses and upper floors limited to residential uses.

iii. Massing & Composition

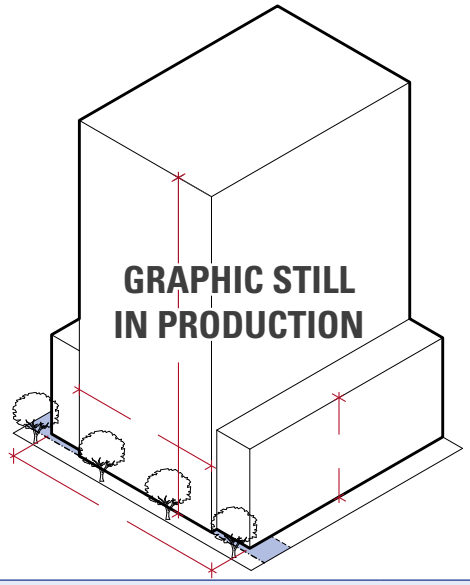

iv. Activation

GRAPHIC STILL
IN PRODUCTION

MAIN BODY	
Facade Build Out (min)	80%
Floorplate (max)	--
Up to 65 ft. (max.)	45,000 sq. ft.
Up to 220 ft. (max.)	30,000 sq. ft.
Building Height	--
Minimum	4 stories
Maximum	220 ft.
Tower Horizontal Width (max)	150 ft.

PERMITTED BUILDING FRONTAGE	
Lobby Entrance	See X.x.x
Storefront	See X.x.x
Terrace	See X.x.x

PERMITTED BUILDING COMPONENTS	
Entry Canopy	See X.x.x
Balcony	See X.x.x
Balcony	See X.x.x
Bay	See X.x.x

FACADE COMPOSITION		
Ground Floor Fenestration (min)	--	
Primary Front	65%	
Secondary Front	50%	
Upper Floor Fenestration (min/max)	30%	50%
Blank Wall (max)	20 ft.	
Continuous Facade (max.)	100 ft.	

USE & OCCUPANCY	
Active Use Frontage (min)	60%
Frontage per Use (max)	200 ft.
Ground Floor Occupied Space Depth (min)	20 ft.
Shared Amenity Space	--
Indoor	5% of Lot Area
Outdoor	5% of Lot Area

c. Commercial Building

A multi-story structure with active ground floor uses and upper floors accommodating non-residential uses.

i. Lot

GRAPHIC STILL
IN PRODUCTION

ii. Placement

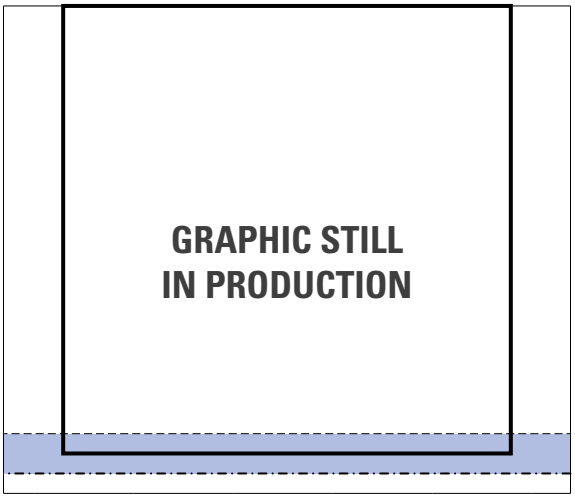

LOT DIMENSIONS		
Width (min/max)	50 ft.	500 ft.

BUILDING SETBACKS		
Primary Front Setback	0' min.	20' max.
Secondary Front Setback	0' min.	20' max.
Side Setback (min)	0 ft.	

PARKING SETBACKS	
Primary Front Setback (min)	20 ft.
Secondary Front Setback (min)	20 ft.

Commercial Building (cont.)
A multi-story structure with active ground floor uses and upper floors accommodating non-residential uses.

iii. Massing & Composition

iv. Activation

GRAPHIC STILL IN PRODUCTION

GRAPHIC STILL IN PRODUCTION

MAIN BODY	
Facade Build Out (min)	80%
Floorplate (max)	50,000 sq. ft.
Building Height	--
Minimum	4 stories
Maximum	150 ft.

PERMITTED BUILDING FRONTAGE	
Lobby Entrance	See X.x.x
Storefront	See X.x.x
Terrace	See X.x.x

PERMITTED BUILDING COMPONENTS	
Entry Canopy	See X.x.x
Balcony	See X.x.x
Balcony	See X.x.x
Bay	See X.x.x

FACADE COMPOSITION		
Ground Floor Fenestration (min)	--	
Primary Front	65%	
Secondary Front	50%	
Upper Floor Fenestration (min/max)	30%	50%
Blank Wall (max)	20 ft.	
Continuous Facade (max.)	100 ft.	

USE & OCCUPANCY	
Active Use Frontage (min)	60%
Frontage per Use (max)	200 ft.
Ground Floor Occupied Space Depth (min)	20 ft.
Shared Amenity Space	--
Indoor	5% of Lot Area
Outdoor	5% of Lot Area

7. USE PROVISIONS

a. Uses from the following principal use categories are permitted by-right or by-right with limitations subject to the standards for each specific use, as applicable:
   i. Arts & Creative Enterprise
   ii. Civic & Institutional
   iii. Commercial Services
   iv. Eating & Drinking Establishments
   v. Lodging
   vi. Office
   vii. Retail
   viii. Urban Agriculture

b. Uses from the residential principal use category require a special permit.
   i. In its discretion to approve or deny a special permit authorizing a residential use, the Planning Board shall consider the following:
      a). The review considerations for all Special Permits as specified in §10.D.1.e. Review Criteria.
      b). Compliance with the approved Neighborhood Development Plan.
      c). Fiscal impact of the residential development on the city.
      d). A demonstrated need for residential to catalyze development, transportation services, or existing commercial activities in the neighborhood.

c. Uses from the following accessory use categories are permitted by-right or by-right with limitations subject to the standards for each specific use, as applicable:
   i. Home Occupations
      a). Family Day Care
      b). Home Office
   ii. Lodging
   iii. Urban Agriculture
   iv. Vehicular Parking

d. Subject to approval by the Planning Director, interim uses of vacant lots for activities other than surface parking may be permitted for up to six (6) months.

e. The following standards apply in addition to the provisions of Article 5 Use Provisions for each principal use:
   i. Commercial Services
      a). Unless otherwise specified, total gross floor area shall be limited to 10,000 square feet per ground floor establishment.
      b). Business Support Services
         i). Total gross floor area shall be limited to 5,000 square feet per ground floor establishment.
      c). Recreation Facility
         i). Total gross floor area is limited to 10,000 square feet per ground floor establishment and 50,000 square feet for upper floor establishments. Upper story establishments may be larger than 50,000 square feet by special permit.
            a. In its discretion to approve or deny a special permit authorizing an upper story recreation facility over fifty thousand (50,000) square feet in gross floor area, the Planning Board shall consider the following:
               ii. The review considerations for all Special Permits as specified in §10.D.1.e. Review Criteria.
               iii. capacity of the local thoroughfare network providing access to the site and impact on tpedestian, bicycle, and motor vehicle traffic and circulation patterns in the neighborhood; and
               iv. location and design of the main entrance.
   ii. Office
      a). Research & Development and/or Laboratory
         i). Storage of flammable liquids, gas, or explosives for off-site use is prohibited.
         ii). Floorspace dedicated to product assembly, packaging, and/or storage must be limited to 25% gross floor area.
         iii). All dust, fumes, gases, odors, smoke or vapors, noise, or vibrations must be effectively confined to the LOT.
   iii. Retail
      a). Consumer Goods
         i). The manufacturing, assembly, and/or packaging of merchandise is prohibited unless ancillary to the sale of products from the same location.
         ii). Total gross floor area is limited to 10,000 square feet per ground floor establishment.
      b). Fresh Food Market and/or Grocery Store
         i). Total gross floor area is limited to 50,000 square feet per establishment and may be larger by special permit.
         ii). Pharmacies are prohibited as an ancillary use.
            a. In its discretion to approve or deny a special permit authorizing a grocery store/supermarket over fifty thousand (50,000) square feet in gross floor area or more than two-hundred (200) feet of frontage, the Planning Board shall consider the following:
               ii. The review considerations for all Special Permits as specified in §10.D.1.e. Review Criteria.;
               iii. capacity of the local thoroughfare network providing access to the site and impact on pedestrian, bicycle, and motor vehicle traffic and circulation patterns in the neighborhood; and
               iv. location and design of the main entrance; and
               v. location of loading, trash, and recycling storage and the procedure for drop-off and pick-up.

f. The following standards apply in addition to the provisions of Article 5 Use Provisions for each accessory use:
   i. Vehicular Parking

TABLE 4.7 Parking Requirements

DU - "Dwelling Unit"

	Motor Vehicle (max)	Short Term (min)	Long Term (min)
ARTS & CREATIVE ENTERPRISE		1.0 / 10,000 sq. ft.	1.0 / 3,000 sq. ft.
CIVIC & INSTITUTIONAL		See Table 7.1	See Table 7.1
COMMERCIAL SERVICES	0.5 / 1,000 sq. ft.	1.0 / 2,500 sq. ft.	1.0 / 10,000 sq. ft.
EATING & DRINKING ESTABLISHMENTS	0.5 / 1,000 sq. ft.	1.0 / 1,000 sq. ft.	1.0 / 5,000 sq. ft.
LODGING	0.5 / room	1.0 / 20 rooms	1.0 / 10 rooms
OFFICE	1.25 / 1,000 sq. ft.	1.0 / 20,000 sq. ft.	1.0 / 5,000 sq. ft.
RESIDENTIAL	1.0 / DU	0.1 / DU	1.0 / DU
RETAIL	0.5 / 1,000 sq. ft.	1.0 / 2,500 sq. ft.	1.0 / 10,000 sq. ft.

a). Surface parking lots are only permitted on an interim basis by Special Permit.
  i). In its discretion to approve or deny a special permit authorizing a surface parking lot, the Planning Board shall consider the following:
    a. The review considerations for all Special Permits as specified in §10.D.1.e. Review Criteria.
    b. documented un-met demand for parking;
    c. development schedule for planned redevelopment of the lot; and
    d. capacity of the local thoroughfare network providing access to the site and impact on pedestrian, bicycle, and motor vehicle traffic and circulation patterns in the neighborhood.

8. PARKING AND LOADING

a. Accessory Parking
  i. Accessory parking spaces must be provided according to Table 4.7.
b. Parking Location
  i. All off-street parking spaces shall be located in underground parking structures, except LOTS abutting rail rights-of-way may have above-ground parking structures up to sixty-five (65) feet in height if utilized as an acoustic, visual, and aesthetic barrier between other uses and active rail lines, service yards, and other MBTA operations. Above-ground parking structures are subject to the provisions of §7.B.9. Parking Structures
  ii. The number of parking spaces provided on any LOT may exceed the maximums allowed per Table X. Parking Standards in the following circumstances:
    a). Off street, accessory parking spaces may be provided on a LOT for a use or uses located on any other LOT within the DEVELOPMENT SITE provided that the requirements of Table 6.6.10 are not exceeded in aggregate for the entire DEVELOPMENT SITE. A development agreement shall be submitted to the Planning Board reducing the maximum parking spaces permitted for any remaining LOT(S) in the DEVELOPMENT SITE by a number equal to the number of spaces being pre-built as a condition of an approved DESIGN AND SITE PLAN.
c. Parking Access
  i. Curb cuts, driveways, and vehicular entrances to off street parking ~~LOTS or structured parking~~ are not permitted along any primary FRONT LOT LINE.
  ii. A minimum of one pedestrian exit from any parking lot and/or parking structure shall lead directly to a public sidewalk (i.e., not directly into a building except underground levels which may be exited by pedestrians directly into a building.
d. Above-Ground Parking Structures
  i. Above ground parking structures compliant to §4.E.8.b. Parking Location are subject to the following standards:
    a). Except for vehicular entrances limited by §4.E.8.c. Parking Access, above ground parking structures must be setback from any FRONT LOT LINE by space designed for occupancy by non-parking uses to a depth of at least thirty (30) feet.
    b). Alternatively, the Planning Board may grant a SPECIAL PERMIT to allow structured parking within the minimum parking setback.
      i). In its discretion to approve or deny a special permit authorizing structured parking within the minimum parking setback, the Planning Board shall consider the following:
        a. The review considerations for all Special Permits as specified in §10.D.1.e. Review Criteria;
        b. Integration of signage and way-finding related to the off-street parking into the architectural design of the building;
        c. Compliance with the provisions of §7.B.9. Parking Structures and §3.G.4. Facade Articulation.
e. Loading Docks and Service Areas
  i. Loading docks and service areas, including trash

removal, shall not be permitted along FRONT LOT LINES except by SPECIAL PERMIT.

9. DEVELOPMENT REVIEW

a. Authority
   i. The Planning Board is the REVIEW BOARD for all development review in the NP-SD, except for Variances.
b. Preliminary Review
   i. A pre-submittal meeting is required for all types of development review.
   ii. The development of thoroughfares, civic spaces, and all building types requires review by the Urban Design Commission in accordance with the provisions of §10.B.3. Design Review.
c. Administrative Development Review
   i. All development, including subdivision of a development site, is prohibited prior to the approval of a neighborhood development plan in accordance with the provisions of §10.C.7. Neighborhood Development Plan Approval
   ii. The construction or reconstruction of thoroughfares requires the approval of a site development plan in accordance with the provisions of §10.C.5. Site Development Plan Approval.
      a). The construction of thoroughfares that differ from the alignment, connectivity, and/or lane geometry of an approved neighborhood development plan is prohibited until site development plan has been approved by the Planning Board.
   iii. The construction or reconstruction of civic spaces requires the approval of a site development plan in accordance with the provisions of§10.C.5. Site Development Plan Approval.
      a). For CIVIC SPACES with less than 10% of their land area within the City of Somerville, The Planning Board may approve a site development plan that does not comply with the provisions set forth in §8.C. Civic & Recreation Spaces, as applicable for each type, upon finding that the submitted plan demonstrates:
         i). satisfaction of the review considerations for all Site Development Plans as specified in §10.C.5.e. Review Criteria; and
         ii). compliance with an approved plan of an abutting jurisdiction.
      b). The Planning Board may solicit comments and/or recommendations from the Urban Design Commission (UDC) in consideration of how the following design elements contribute toward maximization of the actual utility of a CIVIC SPACE for its intended use:
         i). solar orientation;
         ii). pedestrian DESIRE LINES;
         iii). landscape design;
         iv). integration with nearby buildings; and
         v). the relationship of the CIVIC SPACE to others nearby.
   iv. The development or redevelopment of lots or buildings requires site development plan approval in accordance with the provisions of §10.C.5. Site Development Plan Approval.
      a). For lots with less than 10% of their land area within the City of Somerville, the Planning Board may approve a development plan that does not comply with the provisions set forth in §4.E.6. Principal Building Types, §4.E.7. Use Provisions, §4.E.8. Parking and Loading, §8.B. Urban Design, as applicable, upon finding that the submitted plan demonstrates:
         i). satisfaction of the the review considerations for all Site Development Plans as specified in §10.C.5.e. Review Criteria; and.
         ii). Compliance with an approved plan of an abutting jurisdiction.
      b). The Planning Board may solicit comments and/or recommendations from the Urban Design Commission (UDC) in consideration of, but not limited to, the following:
         i). site planning, buildings placement, building bulk, floor plans, exterior design, construction materials, green building techniques, landscaping, entrance and exit placement, signage; and,
         ii). the local microclimate including pedestrian level winds, weather protection, air quality, the reflection of sunlight, and the casting of shadows.
d. Discretionary Development Review
   i. Certain uses, building features, and site characteristics are only permitted in the NP-SD if granted a Special Permit in accordance with the provisions of §10.D.1. Special Permit as a prerequisite to a the issuance of a zoning permit.

F. TUFTS UNIVERSITY (TU-SD)

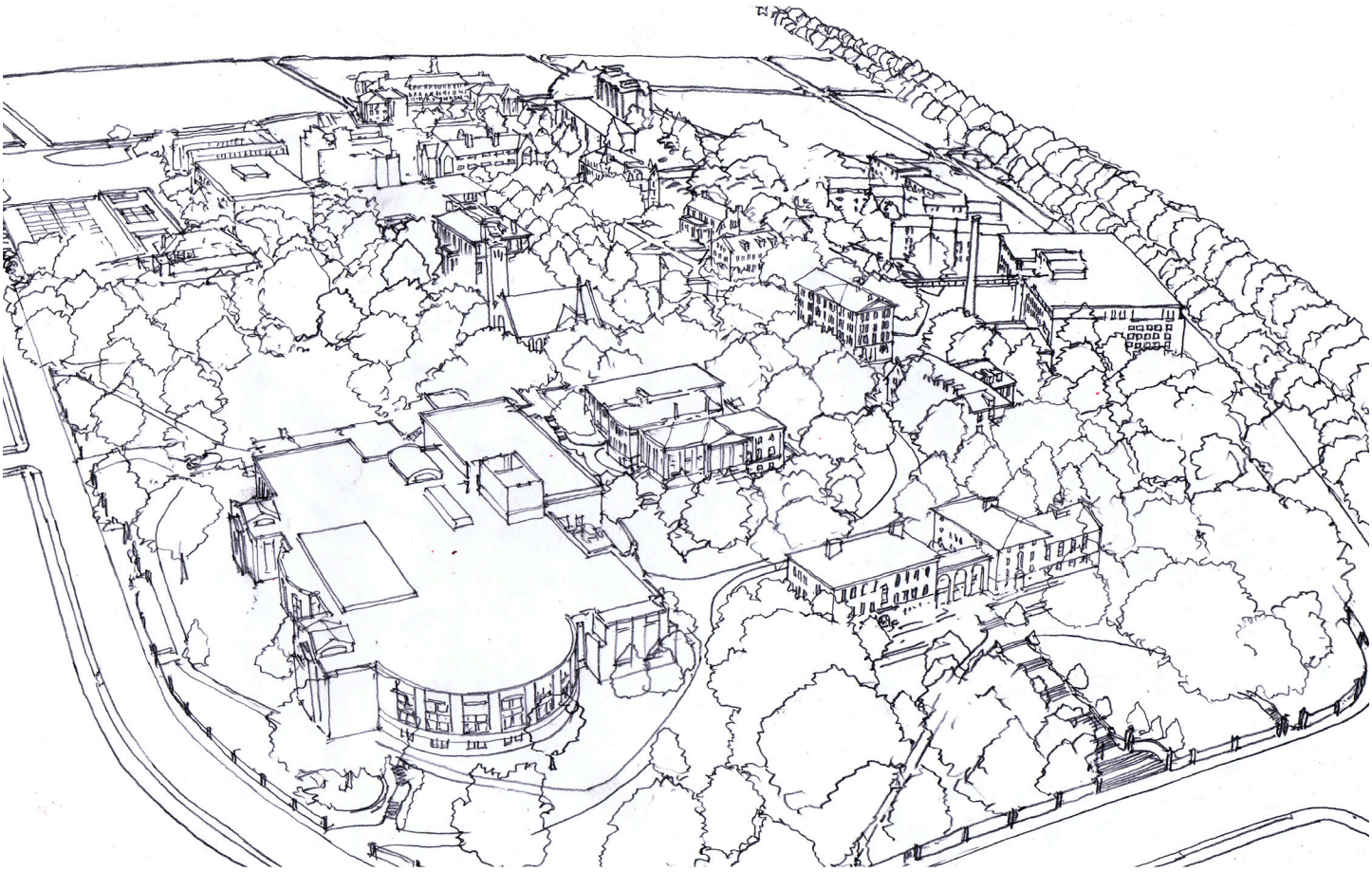

1. INTENT

a. The Tufts University special district (TU-SD) regulates the land areas of Somerville comprising a portion of the main campus of Tufts University, as shown on the Official Zoning Map of the City of Somerville.

b. Where the provisions of this Section conflict with those found elsewhere in this Ordinance, the provisions of this Section shall apply.

2. PURPOSE

a. To preserve land areas primarily dedicated to collegiate educational purposes and other uses necessary to maintain an academic campus.

b. To focus development intensity toward the center of the Tufts campus, while protect adjacent residential properties.

3. APPLICABILITY

a. Where the provisions of this Section conflict with those found elsewhere in this Ordinance, the provisions of this Section shall apply.

4. LOTS

a. All of the land owned by Tufts University situated within the TU-SD, including portions of campus situated in whole or in part within the City of Medford, is considered a single development site comprising multiple permitted buildings and facilities.

5. DIMENSIONAL REQUIREMENTS

a. Tufts University shall not be required to create, establish, accept, or recognize any lot or lot line within the TU-SD. However, nothing herein shall be deemed to abrogate or limit the right of the University to create, establish, accept or recognize any lot within the TU-SD which is otherwise lawful.

b. Multiple principles structures are permitted on one lot within the TU-SD.

c. Special Applicability Provisions

i. With respect to each building or facility of the University, existing or hereafter erected, which lies partly in Somerville and partly in Medford, the provisions hereof shall be applicable to the portion thereof situated in Somerville, but shall not affect any portion thereof situated in Medford.

d. Height Regulations

i. Within the University District the maximum height of buildings in stories and feet shall be regulated according to Table X.

e. Height Bands

i. The Blue Band comprises the land within the University District which

a). is within one hundred (100) feet of

i). the center line of Dearborn Road,

Table X. Building Height

Location	Stories	Feet
With the Blue Band	2.5	35
Within the Red Band	4	56
Within the Yellow Band	6	72
Within the Green Band	8	98

ii). the center line of College Avenue,
iii). the center line of Powder House Boulevard,
iv). the center line of that portion of Packard Avenue between Powder House Boulevard and the southwesterly line of Sawyer Avenue, or
v). the center line of Curtis Street between Sawyer Avenue and the City line, or
b). lies southwesterly of the center line of Sawyer Avenue between Packard Avenue and Curtis Street.

ii. The Red Band comprises the land within the University District which is not included in the Blue Band and
a). is within two hundred (200) feet of
i). (i) the center line of Dearborn Road,
ii). (ii) the center line of College Avenue,
iii). (iii) the center line of Powder House Boulevard,
iv). (iv) the center line of that portion of Packard Avenue between Powder House Boulevard and the southwesterly line of Talbot Avenue, or
v). (v) the center line of Curtis Street between Sawyer Avenue and the City line, or
b). is within one hundred (100) feet of the center line of Sawyer Avenue, between the Red Band measured from Curtis Street and the Red Band measured from Packard Avenue.

iii. The Yellow Band comprises the land within the University District which is not included in the Blue Band or the Red Band and is
a). within the block bounded by Sawyer Avenue, Curtis Street, Professors Row and Packard Avenue, or
b). within the area bounded by Professors Row, Curtis Street, the City Line and a line parallel to and three hundred fifty (350) feet southeasterly from Curtis Street.

iv. The Green Band comprises the land within the University District which is not included in the Blue Band, the Red Band, or the Yellow Band.

f. Notwithstanding the foregoing height limitations, all existing buildings within the University District are permitted, and the floor levels thereof may be used for immediately adjacent structures, and the same shall be deemed to be in compliance with the height requirements of this Ordinance.

g. Setbacks
i. Minimum front yard setbacks from the street side-line shall be required of (a) twenty (20) feet on (i) College Avenue between Talbot Avenue and Powder House Boulevard, (ii) Powder House Boulevard from College Avenue to Packard Avenue, and (iii) Packard Avenue from Powder House Boulevard to Talbot Avenue, and (b) fifteen (15) feet on (i) Dearborn Road and (ii) Curtis Street northwesterly of Sawyer Avenue.
ii. Within the portion of the University District which lies on the southwesterly side of Sawyer Avenue between Packard Avenue and Curtis Street,
a). where building length is less than thirty (30) feet, the setback shall be calculated as follows, with a minimum of fifteen (15) feet required for front yards and a minimum of twenty (20) feet required for rear yards:
i). setback = height + length (facing front/rear lot line) 4
b). and where building length is more than thirty (30) feet, the setback shall be calculated as follows:
i). setback = height + length (facing front/rear lot line) 3
c). and each building shall be separated from all other buildings by at least seventeen (17) feet.
iii. Notwithstanding the foregoing setback regulations, all existing buildings within the University District are permitted and shall be deemed to be in compliance with the setback regulations of this Ordinance.

h. Ground Coverage and Floor Area Ratio Regulations.
i. For purposes of applicability of the requirements of maximum ground coverage and floor area ratio, the University shall, together with each application for a building permit, specify the applicable Measuring Parcel (the "MP"), as defined below, in which the proposed building is located, and shall submit to the Inspectional Services Superintendent a written statement specifying (i) the total land area of the MP, (ii) the area of ground coverage within the MP of all buildings therein, including proposed buildings and existing buildings intended to remain, and (iii) the net floor area within the MP of all buildings therein; including proposed buildings and existing buildings intended to remain.
ii. The Measuring Parcels shall be as follows:
a). The land bounded by Professors Row, College Avenue, Powder House Boulevard and Packard Avenue.
b). The land bounded by Curtis Street, Professors Row, Packard Avenue, and the University District line running from Packard Avenue to Curtis Street between Sawyer Avenue and Whitfield Road.
c). The land bounded by Boston Avenue, College Avenue, Professors Row, Curtis Street, Winthrop Street, the northeasterly side line of Capen Street Extension, and the westerly sidelines of University Avenue extended to Capen Street Extension.
d). The land bounded by Boston Avenue, Dearborn Road and College Avenue.
iii. Upon each such application, all buildings within the applicable MP, including proposed buildings and existing buildings intended to remain, shall,

with respect to the land area of such MP, have (i) a ground coverage not in excess of sixty-five (65) percent, and (ii) a floor area ratio not in excess of 2.0.

iv. In addition to and not in limitation of the foregoing, no building within the portion of the University District designed in g. Setbacks shall have a ground coverage in excess of five thousand (5,000) square feet.

6. USE PROVISIONS

a. The use of real property is regulated according to Table X. Principal Uses and Table X. Accessory Uses in the TU-SD as defined in Article X. Use Provisions.

b. Principal and accessory uses not listed are prohibited.

Table X. Principal Uses in the TU-SD

Y - By-Right SP - Special Permit	Permitted
AUTO ORIENTED	
Motor Vehicle Parking (as noted below)	--
Commercial Parking	Y
CIVIC & INSTITUTIONAL	
Community Center	Y
Educational Facility	Y
Government, Municipal	Y
Hospital	Y
Library	Y
Minor Utility Facility	Y
Museum	Y
Private Non-Profit Club or Lodge	Y
Religious Assembly	Y
Telecommunications	SP
COMMERCIAL SERVICES	
Assembly and Entertainment	Y
Broadcast or Recording Studio	Y
Day Care Service (as noted below)	--
Child Day Care Center	Y
Recreation Facility (as noted below)	--
Indoor Recreational Facility	Y
Outdoor Recreational Facility	Y
LODGING	
Bed & Breakfast	SP
OFFICE	
General Office	Y
Research and Development and/or Laboratory	Y
RESIDENTIAL	
Household Living	Y
Group Living (except as noted below)	--
Community or Group Residence	Y
Dormitory, Fraternity or Sorority	Y
Nursing Home	SP

Table X. Accessory Uses in the TU-SD

Y - By-Right SP - Special Permit	Permitted
HOME OCCUPATIONS	
Home-Based Business (as noted below)	--
Creative Studio	Y
Family Day Care	Y
Home-Based Business	Y
Home Office	Y
LODGING	
Tourist Home	Y
VEHICULAR PARKING	
Accessory Parking	Y
Bike Share	Y
Car Share(as noted below)	--
Up to three (3) spaces	Y
Four (4) or more spaces	SP

7. MOTOR VEHICLE ACCESS & PARKING

a. Applicability

i. The requirements for parking spaces are determined primarily by the number of persons in the Tufts Campus population, including faculty, staff and students, and visitors, who use motor vehicles. The requirements for loading areas are determined primarily by the function and size of various buildings comprised in the Tufts Campus. Consequently, parking and loading requirements shall be construed as if they were applicable to the Tufts Campus as a whole, and may be fulfilled by facilities serving the Tufts Campus located in either Somerville or Medford. Properties owned by Tufts University which are not within the University District but are located within five hundred (500) feet thereof shall be governed by the provisions of this Section insofar as appropriate in lieu of provisions otherwise applicable.

ii. For purposes hereof Tufts Parking shall comprise all parking facilities within the Tufts Campus which are owned or controlled by Tufts University, including off-street facilities, parking spaces on private ways subject to such control, such parking spaces on public ways as are subject to such control, and parking spaces on premises of fraternities or sororities located within the Tufts Campus which are limited to use by persons included in Groups A through E hereinafter specified. Tufts Parking shall be available for use only by persons to whom a Parking Permit has been issued by Tufts University. Such Permits shall be issued only to members of the University faculty, staff or student body, or to persons having a need for access to Tufts Parking for temporary use, and may be issued for general use of Tufts Parking or for use limited to specified areas of Tufts Parking or for limited time periods. For purposes hereof the persons entitled to use Tufts Parking shall be classified as follows:

a). Group A: faculty and staff engaged on a full-time basis.

b). Group B: faculty and staff engaged on a part-time basis

c). Group C: students who are resident on the Tufts Campus.

d). Group D: students who are not resident on the Tufts Campus.

e). Group E: other entitled users.

iii. Tufts University shall annually, within sixty (60) days after September 1 in each year, certify in writing to the Traffic and Parking Director of the City of Somerville as of that date (i) the number of parking spaces comprised in Tufts Parking, (ii) specification in reasonable detail of the locations thereof, (iii) the average number of persons in each of Groups A through D as specified during the preceding twelve-month period, and ten percent of the sum of Groups A and B as constituting Group E, (iv) the average of the number of persons holding Parking Permits, of the specified classifications, during the preceding twelve month period, and (v) the incidence of use of Tufts Parking by persons not holding Parking Permits, insofar as known to the police staff of Tufts University. If and whenever such a certification shall indicate a deficiency of the number of parking spaces comprised in Tufts Parking to meet the requirements of this Section, Tufts University shall also submit therewith a proposed plan for the interim and long term correction and elimination of such deficiency. With respect to the period from the date of adoption of this Ordinance to the submission of the first parking and traffic study required by the following sentence, such deficiency as exists in Tufts Parking shall be dealt with and corrected by the implementation by Tufts University of the provisions of the Tufts Parking Plan dated June 6, 1989, submitted by Tufts University to the Traffic and Parking Director. Tufts University shall, beginning in 1995, and thereafter every three (3) years or such longer period as shall be approved by the Traffic and Parking Director, submit to the Director a parking and traffic study, prepared by a qualified professional consultant, which shall in light of experience and the data contained in the University's annual certifications evaluate the reasonableness of the Parking Factors set forth below, and if appropriate, make recommendation for increase or decrease in the number of parking spaces required.

b. Number of Parking Spaces

i. The number of parking spaces required to be comprised in Tufts Parking shall, unless otherwise determined pursuant to provisions of the following paragraph, be equal to the sum of the products of the Parking Factor specified below times the number of persons, as set forth in the most recent certification by the University, in each of the Groups specified below, to wit:

a). Group A: .47

b). Group B: .37

c). Group C: .12

d). Group D: .24

e). Group E: .44

ii. If and whenever any parking and traffic study indicates that a greater or lesser number of parking spaces is reasonably required for the uses and activities of Tufts University than is set forth in the preceding paragraph with respect to any or all of the categories therein specified, the Traffic and Parking Director may (i) require the University to submit and implement a plan for interim or long term correction of any deficiency in parking spaces for any of said categories, or (ii) upon application of the University, permit a reduction in the required number of parking spaces by not more than twenty-five (25) percent. A reserve area, sufficient to accommodate at least one-half of the amount of reduction in number of parking spaces required and otherwise reasonably satisfactory to the Traffic and Parking Director, shall be provided and specified in the application. Permission granted for such reduction shall remain in effect for an initial period of not more than three years, but may subsequently be extended or granted for a longer period upon reasonable

verification that the parking is adequate.

c. Location of Parking Spaces
   i. In order that Tufts Parking shall be reasonably distributed through the Tufts Campus and related to the various uses and needs, it is provided that the following minimum and maximum percentages of Tufts Parking shall be located in the specified portions of the Tufts Campus:
      a). Area between Professors Row - Dearborn Road in Somerville and Boston Avenue in Medford: minimum - 25%; maximum - 75%
      b). Area southwesterly of Professors Row in Somerville: minimum - 10%; maximum - 50%
      c). Area easterly of Boston Avenue in Medford: minimum - 10%; maximum - 60%
d. Parking Lot Landscaping Requirements
   i. Where the provision of off-street parking for six (6) or more cars is placed within the Blue Band, there shall be landscape screening within the perimeter of said parking area(s) adjacent to the perimeter of the University District in the minimum width of three (3) feet. Such screening shall consist of densely planted shrubs and/or trees, and/or walls or fences no less than five (5) feet nor more than twelve (12) feet above finished grade.
e. Loading Area Requirements
   i. Loading areas shall be provided in such buildings, and shall be of such sizes, as shall be reasonably needed for and adapted to the loading requirements of various University buildings, taking into account the functions and sizes thereof. Buildings having functions which require delivery of materials in large size trucks shall have at least one loading bay for each fifty thousand (50,000) square feet of net floor area for which loading is required. Buildings or portions of buildings having functions which require delivery of materials in smaller size trucks, in smaller quantities or on infrequent occasions shall be served by appropriate smaller loading areas or facilities which are adapted to the particular need and consistent with pedestrian and vehicular traffic and safety. Tufts University shall submit with each application for a building permit documentary evidence reasonably satisfactory to the Building Official that the loading areas and facilities proposed in such application are in accordance with the foregoing requirements and guidelines.
f. Incorporated Provisions
   i. The provisions this Ordinance with respect to dimensions of parking spaces and aisles shall apply to the University District; provided, however, that not more than thirty (30) percent of the required parking spaces may be designed and specified for use only by compact cars, and may have dimensions of eight (8) foot width and seventeen (17) foot depth for angle parking or seventy-two (72) foot width and twenty (20) foot depth for parallel parking. It is further provided that any parking facilities situated in whole or in part in the City of Medford which comply with the applicable dimensional requirements thereof shall be deemed to meet the requirements of this Section.
   ii. The provisions of this Section with respect to exceptions and special permits shall apply to the University District insofar as pertinent thereto.

8. DEVELOPMENT REVIEW

a. Authority
   i. The Zoning Board of Appeals is the REVIEW BOARD for all applications for a special permit in the TU-SD.
b. Discretionary Development Review
   i. Special Permit Findings
      a). In its discretion to approve or deny a special permit required by the provisions of this Section, the Zoning Board of Appeals must consider the following:
         i). The review considerations for all Special Permits as specified in §10.D.1.e. Review Criteria;
         ii). impact on surrounding residential properties; and
         iii). impact on the experience of the public realm that would result from strict compliance to the standard of this Ordinance.

G. FLOODPLAIN OVERLAY (FO-SD)

1. PURPOSE

a. to ensure public safety through reducing the threats to life and personal injury
b. to eliminate new hazards to emergency response officials
c. to prevent the occurrence of public emergencies resulting from water quality contamination and pollution due to flooding
d. to avoid the loss of utility services which if damaged by flooding would disrupt or shut down the utility network and impact regions of the community beyond the site of flooding
e. to eliminate costs associated with the response and cleanup of flooding conditions
f. to reduce damage to public and private property resulting from flooding.

2. APPLICABILITY

a. Where the provisions of this Section conflict with those found elsewhere in this Ordinance, the provisions of this Section shall apply.
b. The FO-SD includes all special flood hazard areas within the City of Somerville designated as Zone A or Zone AE on the Flood Insurance Rate Map (FIRM) issued by the Federal Emergency Management Agency (FEMA) for the administration of the National Flood Insurance Program.
c. The map panels of the Middlesex County FIRM, dated June 4, 2010, that are wholly or partially within the City of Somerville are:
   i. 25017C0417E
   ii. 25017C0419E
   iii. 25017C0436E
   iv. 25017C0438E
   v. 25017C0439E
   vi. 25017C0576E
   vii. 25017C0577E
d. The boundaries of the FO-SD are defined by the 100-year base flood elevations shown on the FIRM and further defined by the Middlesex County Flood Insurance Study (FIS) report dated June 4, 2010.
e. The FIRM and FIS report are incorporated herein by reference and are on file with the City Clerk, Planning Board, Building Official, Conservation Commission and City Engineer.

3. DEFINITIONS

a. For the purpose of this overlay district alone, the following definitions apply:
   i. Development: Includes any man-made change to improved or unimproved real estate, including but not limited to building or other structures, mining, dredging, filling, grading, paving, excavation or drilling operations.
   ii. Lowest Floor: The lowest floor of the lowest enclosed area (including basement or cellar). An unfinished or flood resistant enclosure, usable solely for parking of vehicles, building access or storage in an area other than a basement area is not considered a building's lowest floor; provided, that such enclosure is not built so as to render the structure in violation of the applicable non-elevation design requirements of Federal Code of Regulations Section 60.3.
   iii. Manufactured Home: A structure, transportable in one or more sections, which is built on a permanent chassis and is designed for use with or without a permanent foundation when connected to the required utilities. For floodplain management purposes the term "manufactured home" includes park trailers, travel trailers, and other similar vehicles placed on a site for greater than one hundred eighty (180) consecutive days, but, for insurance purposes the term "manufactured home" does not include park trailers, travel trailers, and other similar vehicles.
   iv. New Construction: For the purpose of determining flood insurance rates, structures for which the "start of construction" commenced on or after the effective date of an initial FIRM or after December 31, 1974, whichever is later. For floodplain management purposes, "new construction" means structures for which the "start of construction" commenced on or after the effective date of a floodplain management regulation adopted by a community.
   v. Structure: One of the following, primarily located above ground:
      a). A walled and roofed building,
      b). a manufactured home
      c). a gas or liquid storage tank.
   vi. Substantial improvement: Any repair, reconstruction, or improvement of a structure, the cost of which equals or exceeds fifty (50) percent of the market value of the structure either:
      a). before the improvement or repair is started, or
      b). if the structure has been damaged, and is being restored, before the damage occurred.
      c). A "substantial improvement" is considered to occur when the first alteration of any wall, ceiling, floor, or other structural part of the building commences, whether or not that alteration affects the external dimensions of the structure.

4. COMPLIANCE WITH REGULATIONS

a. All development in the FO-SD must be in compliance with, or operating under duly approved variances from, the following regulations:
   i. Section of the Massachusetts State Building Code which addresses floodplain and coastal high hazard areas (currently 780 CMR 120.G, "Flood Resistant Construction and Construction in Coastal Dunes")
   ii. Wetlands Protection Regulations, Department of Environmental Protection (DEP) (currently 310 CMR 10.00)
   iii. Sections of Massachusetts Law which address altering of land bordering waters (currently Chapter 131, Section 40 of the Massachusetts General Laws)
   iv. Inland Wetlands Restriction (currently 310 CMR 13.00);
   v. Minimum Requirements for the Subsurface

Disposal of Sanitary Sewage (currently 310 CMR 15, Title 5)

5. DISTRICT REGULATIONS

a. In "A" Zones, the best available Federal, State, local or other floodway data shall be used to prohibit encroachments in floodways which would result in any increase in flood levels within the community during the occurrence of the base flood discharge.

b. In Zones AE:
   i. along watercourses that have regulatory floodways designated within the City of Somerville on the FIRM, encroachments are prohibited in the regulatory floodway which would result in any increase in flood levels within the community during the occurrence of the base flood discharge
   ii. along watercourses that have not had a regulatory floodway designated, no new construction, substantial improvement, or other development shall be permitted unless it is demonstrated that the cumulative effect of the proposed development, when combined with all other existing and anticipated development, will not increase the water surface elevation of the base flood

c. The following uses of low flood damage potential and causing no obstructions to flood flows are encouraged, provided they are permitted in the underlying district and they do not require structures, fill, or storage of materials or equipment:
   i. outdoor recreational uses
   ii. conservation of water, plants, wildlife
   iii. buildings lawfully existing prior to the adoption of these provisions

6. NOTIFICATION OF WATERCOURSE ALTERATION

a. In a riverine situation, the Building Official shall notify the following of any alteration or relocation of a watercourse:
   i. Adjacent Communities
   ii. NFIP State Coordinator: Massachusetts Department of Conservation and Recreation, 251 Causeway Street, Suite 600-700, Boston, MA 02114-2104
   iii. NFIP Program Specialist: Federal Emergency Management Agency, Region 1, 99 High Street, 6th Floor, Boston, MA 02110

ARTICLE 5: USE PROVISIONS

GENERAL 159
- Categorization System 159
- Category Designation 159
- Large Floor Plate Uses 159
- Outdoor Storage & Display 159

PRINCIPAL USE CATEGORIES 160
- General 160
- Arts & Creative Enterprise Use Category 160
- Auto-Oriented Use Category 161
- Civic & Institutional Use Category 162
- Commercial Services Use Category 163
- Eating & Drinking Use Category 165
- Industrial Use Category 165
- Lodging Use Category 167
- Office use category 167
- Residential Use Category 168
- Retail Use Category 168
- Urban Agriculture Use Category 170

ACCESSORY USE CATEGORIES 172
- General 172
- Home Occupations Accessory Use Category 172
- Lodging Accessory Use Category 173
- Urban Agriculture Accessory Use Category 173
- Vehicular Parking Accessory Use Category 173
- Residential Accessory Use Category 174

USE TABLES 175
- General 175
- Protected Uses 175
- Understanding the Use Tables 175

A. GENERAL

1. CATEGORIZATION SYSTEM

a. Use Categories
   i. Principal land uses are grouped into the following use categories for organizational purposes:
      a). Arts & Creative Enterprise
      b). Auto-Oriented
      c). Civic & Institutional
      d). Commercial Services
      e). Eating & Drinking Establishments
      f). Industrial
      g). Lodging
      h). Office
      i). Residential
      j). Retail
      k). Urban Agriculture
   ii. Accessory land uses are grouped into the following use categories for organizational purposes:
      a). Home Occupations
      b). Lodging
      c). Urban Agriculture
      d). Vehicular Parking

b. Use Subcategories
   i. Use categories are further divided into more specific "subcategories".
   ii. Use subcategories provide a systematic basis for grouping individual land uses together with other, similar land uses based on common functional, product, or physical characteristics.
   iii. Characteristics include the type and amount of activity, the manner of tenancy, the conduct of customers, how goods or services are sold or delivered, and likely impact on surrounding properties.

c. Specific Uses
   i. Some subcategories are further broken down as follows:
      a). to identify specific uses that are regulated differently than others within the same subcategory. These uses are identified by text that reads: "the following uses are regulated differently". In this circumstance, the list of uses is not considered all inclusive of the possible uses that meet the definition of the subcategory.
      b). to identify a restricted list of specific uses that are included in the subcategory. These uses are identified by text that reads "the specific uses are". In this circumstance, the list of uses is considered exclusive and individual uses not expressly identified are prohibited.

2. CATEGORY DESIGNATION

a. The Building Official shall classify land uses on the basis of the use category, subcategory, and specific use type definitions of §5.B. Principal Use Categories and §5.C. Accessory Use Categories.
b. A use classified into one category or subcategory cannot also be classified in a different use category or subcategory.
c. If a use is not listed but is similar in nature and impact to a use subcategory or specific use type that is listed on Table 5.1, the Building Official shall interpret the use as permitted and issue a written interpretation in accordance with §10.C.4. Written Interpretation.
d. If a use is not listed and cannot be interpreted as similar in nature and impact to a use subcategory or specific use type that is listed on Table 5.1, the use is prohibited.

3. LARGE FLOOR PLATE USES

a. Unless otherwise specified, any single Commercial Service or Retail Sales use greater than ten-thousand (10,000) leasable square footage requires a Special Permit.
   i. In its discretion to approve or deny a special permit authorizing a consumer service or retail sales use over ten thousand (10,000) square feet in gross floor area, the review board shall consider the following:
      a). the review considerations for all Special Permits as specified in §10.D.1.e. Review Criteria;
      b). Compatibility with the intensity of activity associated with the surrounding land uses.
      c). Capacity of the local thoroughfare network providing access to the site and the impact on pedestrian, bicycle, and vehicular traffic and circulation patterns in the neighborhood.

4. OUTDOOR STORAGE & DISPLAY

a. Outdoor storage of equipment, inventory, materials, merchandise, supplies, or other items is prohibited, except in the Fabrication and Commercial Industry districts.
b. Unless otherwise specified, outdoor display of products and merchandise is prohibited.

B. PRINCIPAL USE CATEGORIES

1. GENERAL

a. This section defines the categories, subcategories, and specific types of principal uses.

b. In some cases, use-specific regulations and/or performance standards are identified. Compliance with use-specific regulations and/or or performance standards is required regardless of whether the use is permitted by-right or by special permit.

c. In some cases, a principal use may include ancillary activities that are subordinate and incidental the day-to-day operations of the principal use. When identified, such ancillary activities do not require separate approval, but must comply with any standards applicable to the principal use.

2. ARTS & CREATIVE ENTERPRISE USE CATEGORY

The arts & creative enterprise principal use category includes sole-proprietors, non-profit organizations, and commercial businesses involved directly or indirectly in the creation, production, manufacture, distribution, publishing, rehearsal, performance, broadcast, selling, or teaching of the visual arts, performing arts, applied arts, literature, heritage, media, music, information technology, communications media, or digital content & applications; or the invention, design, prototyping, or fabrication, assembly, and packaging of parts for further assembly or consumer goods for sale. The arts & creative enterprise principal use subcategories are:

a. Artisan Production

Individuals and firms involved in the on-site production of hand-fabricated or hand-manufactured parts and/or custom or craft consumer goods through the use of hand tools or small-scale, light mechanical equipment. The artisan production subcategory includes apparel manufacturing, breweries, cabinetry, chocolatiers, confectionery, furniture making, glass working, jewelry making, metal working, pottery, sculpture, wood working, and their substantial equivalents. Showrooms and the ancillary sales of goods produced on-site are permitted. The following standards apply:

i. The production of offensive noise, vibration, smoke, dust or other particulate matter, heat, humidity, glare, or other objectionable effect is prohibited, except in the Fabrication and Commercial Industry districts.

b. Arts Exhibition

The production, rehearsal, or live performance of cultural entertainment or artistic expression such as singing, dancing, comedy, literary readings, performance art, musical theater, live plays, and concerts. The arts exhibition subcategory includes venues such as assembly halls, auditoriums, cinemas, concert halls, dinner theaters, gallery space, performance halls, rehearsal & preproduction studios, live theaters, and their substantial equivalents along with the administrative offices, booking agencies, and ticket sales of performing arts organizations.

c. Arts Sales & Services

The display and retail sale, lease, or rental of finished artwork, art supplies, musical instruments, multi-media, or publications and activities that provide various arts related services to individuals, groups, or businesses including galleries, supply stores, printing shops, set design studios, and their substantial equivalents. The following standards apply:

i. Outdoor display of products and merchandise is permitted according to the following:

a). Outdoor display is permitted in any storefront frontage or on a public sidewalk subject to all City Ordinances as an ancillary activity.

b). Outdoor display must be removed and placed inside a fully-enclosed building at the end of each business day.

c). Display areas extending more than eight feet from the facade are prohibited.

d). A minimum four (4) foot wide clear path of access must be maintained to the principal entrance.

e). Display areas are permitted to occupy no more than 30% of the frontage area.

f). Display areas must comply with the sidewalk standards of Article 8 Public Realm Standards.

d. Creative Studio

Individuals and firms that generate and exploit intellectual property through individual creativity, skill, and talent; create, produce, distribute, rehearse, perform, sell, and/or teach the visual arts, performing arts, applied arts, literature, heritage, media, or music; or create, produce, invent, design, develop or prototype content, goods, or products. The following standards apply:

i. The production of offensive noise, vibration, smoke, dust or other particulate matter, heat, humidity, glare, or other objectionable effect is prohibited.

ii. The retail sale of art and other craft goods produced on-site is permitted only between the hours of 7:00am to 9:00pm.

e. Design Services

Individuals and firms that provide design services to individuals, groups, or businesses including architectural design, fashion design, graphic design, interior design, industrial design, landscape architecture, product development, software development, urban design, and their substantial equivalents.

f. Shared Workspaces & Arts Education

The transfer of knowledge or skills related to the creative enterprises through teaching, training, or research; organizations providing collaborative workplace facilities and business planning, finance, mentoring, and other business or administrative support services to creative enterprises; and multi-purpose facilities dedicated to providing space for multiple creative enterprises. The arts education and shared workspace subcategory includes arts centers, creative incubators, culinary incubators, design & fabrication centers, fabrication laboratories, and their substantial equivalents.

g. Work/Live Creative Studio

Creative studio space consisting of not more than one (1) room, including an area for accessory living, where the work needs of creative industry activities within the same building take precedence over any "quiet expectations" of the residents and neighbors residing in work/live creative studios within the same building. The

following standards apply:

i. Kitchen, dining, and bathroom facilities, excluding work sinks, must be shared between the tenants of each floor.
ii. Floor area for accessory living space is limited to 200 sq. ft. or 30% of the total floor space of a Work/Live Studio, whichever is less.
iii. The occupant(s) of the Work/Live Creative Studio must be a certified Artist with the Somerville Arts Council.
iv. In its discretion to approve or deny a special permit authorizing a work/live creative studio use, the review board shall consider the following:
    a). The review considerations for all Special Permits as specified in §10.D.1.e. Review Criteria.
    b). Width of doorways and hallways to accommodate the moving of large objects.
    c). Weight capacity of elevators to accommodate heavy equipment.
    d). Access to natural light within each studio with a preference towards northern exposure.
    e). Sound transmission co-efficients to prevent the transmission of sounds from equipment or repetitive tasks.
    f). Ventilation and air handling techniques to ensure the safety and health of residents, visitors, and neighbors.
    g). Ceiling heights that allow for the creation of large works and equipment, including machinery and lighting.
    h). Weight-bearing capacity of the floor.
    i). Ability to install flooring for specific users such as dancers or performers.

3. AUTO-ORIENTED USE CATEGORY

The auto-oriented principal use category includes uses that provide for the sale, rental, maintenance, repair, or storage of new or used vehicles or equipment. The auto-oriented principal use subcategories are:

a. Commercial Vehicle Repair & Maintenance
Repair, installation, or maintenance of the mechanical components or the bodies of large trucks, mass transit vehicles, large construction equipment, or commercial boats.

b. Dispatch Service
The storage and dispatch of ambulances, taxis, limousines, armored cars, tow trucks, buses, and similar vehicles for specialized transportation, including where ambulance crews not located at a hospital or fire department stand by for emergency calls, ancillary professional offices, and/or minor vehicle service and maintenance repair. The following specific dispatch service uses are regulated differently than other uses classified within the dispatch service subcategory:
    i. Towing Service: Storage of towed vehicles and/or the storage and dispatch of tow vehicles.
        a). In its discretion to approve or deny a special permit authorizing a towing service use, the review board shall consider the following:
            i). the review considerations for all Special Permits as specified in §10.D.1.e. Review Criteria;
            ii). Compatibility of the towing service with other surrounding properties.
            iii). Visual impact and quality of screening of stored vehicles.
            iv). Location of driveway entrances and access points in relation to the safety of pedestrians, bicyclists, and motor vehicles.
            v). Sight lines needed by the driver of any vehicle entering or exiting the site.
            vi). Procedures for controlling emission of noxious or hazardous materials or substance.

c. Gasoline Station
Uses engaged in the retail sales of personal or commercial vehicle fuels.

d. Motor Vehicle Parking
The storage, for a limited period of time, of operable motor vehicles. The specific motor vehicle parking uses are:
    i. Car-Share Parking: Motor vehicle parking for vehicles available for hourly rental. The following standards apply:
        a). In its discretion to approve or deny a special permit authorizing a car-share parking use, the review board shall consider the following:
            i). The review considerations for all Special Permits as specified in §10.D.1.e. Review Criteria.
            ii). Compliance with any minimum parking requirement of this Ordinance.
            iii). Privacy of on-site or abutting residential uses from the route of pedestrian access to the car-share parking space.
    ii. Commercial Parking: Motor vehicle parking that is available to the public at-large for an hourly or daily fee. The following standards apply:
        a). In its discretion to approve or deny a special permit authorizing a commercial parking use, the review board shall consider the following:
            i). The review considerations for all Special Permits as specified in §10.D.1.e. Review Criteria.
            ii). Impact of the fee schedule and operation of the commercial parking facility on the use of on-street parking.
            iii). Capacity of the local thoroughfare network providing access to the site and impact on pedestrian, bicycle, and vehicular traffic and circulation patterns in the neighborhood.
            iv). Location of driveways entrances and access points in relation to the safety of pedestrians, bicyclists, and motor vehicles.
            v). Visual impact and quality of screening of vehicles.
    iii. Off-Site Accessory Parking: Motor vehicle parking that supports a principal use on a different lot. The following standards apply:
        a). Off-site accessory parking must be located within (660) feet from the principal use.
        b). In its discretion to approve or deny a special

permit authorizing an off-site accessory parking use, the review board shall consider the following:
i). The review considerations for all Special Permits as specified in §10.D.1.e. Review Criteria.
ii). Location of driveways entrances and access points in relation to the safety of pedestrians, bicyclists, and motor vehicles.
iii). Visual impact and quality of screening of vehicles.

e. Personal Vehicle Repair & Maintenance
Repair, installation, or maintenance of the mechanical components or the bodies of automobiles, small trucks or vans, motorcycles, motor homes, or recreational vehicles or that wash, clean, or otherwise protect the exterior or interior surfaces of these types of vehicles.

f. Vehicle Sales
Sale or rental of new or used automobiles, small trucks or vans, motorcycles, motor homes, or recreational vehicles. Examples of personal vehicle sales & rental establishments include new and used automobile dealers, and car rental agencies. The following standard applies:
i. On-site vehicle maintenance and repair is considered an additional principal use.

4. CIVIC & INSTITUTIONAL USE CATEGORY

The civic & institutional principal use category includes public, quasi-public, and private uses that provide unique services that are of benefit to the public as a whole. The civic and institutional principal use subcategories are:

a. Community Center
A place for recreational, social, educational or cultural activities operated by a non-profit or public group or agency.

b. Educational Facility
A public or private facility for the general or specialized education, instruction, or training in subject areas, skills, or vocations.

c. Hospital
An institution providing health services to patients and offering inpatient (overnight) medical or surgical care.
i. In its discretion to approve or deny a special permit authorizing a hospital use, the review board shall consider the following:
a). The review considerations for all Special Permits as specified in §10.D.1.e. Review Criteria.
b). Compatibility with the level of activity associated with surrounding properties.
c). Capacity of the local thoroughfare network providing access to the site and impact on pedestrian, bicycle, and vehicular traffic and circulation patterns in the neighborhood.
d). Location, visibility, and design of the principal entrance, emergency room, patient drop-off areas, and outdoor amenity space for employees or patients.
e). Location and adequacy of existing public utilities and proposed changes to the sanitary sewer system, storm drainage system, and public water.

d. Library
The special purpose preservation, exhibition, and personal lending of books, manuscripts, and similar materials for study and reading by the general public.

e. Minor Utility Facility
Public and quasi-public facilities and services that need to be located in the area where the service is to be provided, such as water and sewer pump stations; electrical transforming substations; wind energy conversion systems; solar collector systems; water conveyance systems; gas regulating stations; storm water facilities and conveyance systems; telephone switching equipment; emergency communication warning/broadcast facilities; and central heating facilities.
i. In its discretion to approve or deny a special permit authorizing a minor utility use shall consider the following:
a). The review considerations for all Special Permits as specified in §10.D.1.e. Review Criteria.
b). Need for a facility at the proposed site taking into consideration the proximity of the area of service of the utility.
c). Visual impact and quality of screening from abutting thoroughfares and surrounding properties.
d). Impact and mitigation of offensive noise, vibration, smoke, dust or other particulate matter, heat, humidity, glare or other objectionable effects.
e). Location of access for servicing the facility.

f. Major Utility Facility
Infrastructure services that have substantial land use impacts on surrounding areas. Typical uses include but are not limited to water and wastewater treatment facilities, major water storage facilities and electric generation plants.

g. Museum
A repository for a collection or collections of historical, natural, scientific, or literary objects of interest. The following standards apply:
i. Ancillary sales and the holding of meetings and social events are permitted.

h. Private, Non-Profit Club or Lodge
A facility operated for an organization, which is open to people upon invitation, nomination, or payment of fees or dues, for social, recreational, and/or entertainment activities. The following standards apply:
i. A non-profit club or lodge must be managed by an association with elected officers and directors, pursuant to a charter or bylaws, that generally excludes the general public from its premises, and which holds property for the common benefit of its members.
ii. A non-profit club or lodge shall not offer membership for a period of less than two months.
iii. A non-profit club or lodge may serve meals and/or alcohol on the premises for members and their guests.
iv. A non-profit club or lodge shall generally be open to members only but may be open to occasional

guests of members.

v. A non-profit club or lodge may use one central gathering area for rental for events and/or community activities, including the service of meals and/or alcohol, but such rentals and activities shall not exceed 80 events per year and shall not continue past 1:00 AM Friday, Saturday, and Sunday nights and 12:00 AM Monday through Thursday nights.

vi. In its discretion to approve or deny a special permit authorizing a private, non-profit club or lodge use, the review board shall consider the following:

a). The review considerations for all Special Permits as specified in §10.D.1.e. Review Criteria.

b). Compatibility with the level of activity associated with the surrounding properties.

c). Location of access to the site and building.

d). Impact and mitigation of the production of offensive noise and light.

e). Location of trash and recycling storage and the procedure for pickup.

i. Religious Assembly
Activities related to the practice of religions, as defined by M.G.L. 40A, Section 3 and 42 U.S.C. §2000cc.

5. COMMERCIAL SERVICES USE CATEGORY

The commercial services principal use category includes uses and activities that provide various services, entertainment, or recreation to individuals, groups, or businesses. Drive-up and drive-through service is prohibited. The commercial services principal use subcategories are:

a. Animal Services
Any of the following: (1) grooming of dogs, cats, and similar small animals, including dog bathing and clipping salons and pet grooming shops; (2) animal shelters, care services, and kennel services for dogs, cats and small animals, including boarding kennels, pet resorts/hotels, dog training centers, and animal rescue shelters excluding those operated by the City of Somerville; (3) animal hospitals or veterinary services; (4) household pet crematory services; or (5) taxidermy services.

i. Pet Grooming: The grooming of dogs, cats, and similar household pets.

ii. Pet Training, Care, or Shelter: kennel and/or training centers for animals operated on a daytime-only basis

iii. Commercial Kennel: animal rescue shelters, boarding facilities, pet resorts/hotels, or training services for dogs, cats, and other household pets.

iv. Veterinarian: the diagnosis and treatment of animal patients' illnesses, injuries, and physical malfunctions performed in an office setting. The following standards shall apply:

a). Overnight boarding of animals is limited to patients recovering from medical procedures

b). In its discretion to approve or deny a special permit authorizing a veterinarian use, the review board shall consider the following:

i). The review considerations for all Special Permits as specified in §10.D.1.e. Review Criteria.

ii). Methods or techniques for noise mitigation to limit noise for other users of the building and abutting properties

iii). Operational procedures for cleaning the interior and exterior of the site and trash storage and removal.

iv). Amount of on-site landscaping.

b. Assembly and Entertainment
Uses that provide gathering places for participant or spectator recreation, entertainment, or other assembly activities including, but not limited to, a theater, cinema, and/or venue of a professional or semi-professional sports team. The following standards apply:

i. Assembly and entertainment uses may provide incidental food or beverage service for on-site consumption.

c. Banking & Financial Services
Uses related to the exchange, lending, borrowing, and safe-keeping of money. The following banking & financial service specific use types are regulated differently than other uses classified within the banking & financial services subcategory:

i. Personal Credit: Banking uses providing short-term loans and check cashing services without providing traditional banking accounts.

d. Broadcast and/or Recording Studio

i. Uses that provide studios for audio or video production, recording, filming, or broadcasting of radio or television programs over-the-air, cable, or satellite. Telecommunications transmission towers are regulated according to the provisions of §6.C. Wireless Communication Structures

e. Building & Home Repair Services
Uses that provide maintenance and repair services for all structural and mechanical elements of structures, as well as the exterior spaces of a premise. Typical uses include janitorial, landscape maintenance, exterminator, plumbing, electrical, HVAC, window cleaning, and similar services.

i. In its discretion to approve or deny a special permit authorizing a building & home repair services use, the review board shall consider the following:

a). The review considerations for all Special Permits as specified in §10.D.1.e. Review Criteria.

b). Visual impact and quality of screening of parked business vehicles.

f. Business Support Services
Uses that provide personnel services, printing, copying, photographic services, or communication services to businesses or consumers. Typical uses include employment agencies, copy and print shops, telephone answering services, and photo developing labs.

g. Caterer/Wholesale Food Production
The preparation of food in significant quantities to be delivered and served or sold off-site.

i. In its discretion to approve or deny a special permit authorizing a caterer/wholesale food production use, the review board shall consider the following:

a). The review considerations for all Special Permits as specified in §10.D.1.e. Review Criteria.

b). Location of driveway entrances and access points in relation to the safety of pedestrians, bicyclists, and motor vehicles.
c). Visual impact and quality of screening of parked business vehicles.
d). Location of loading, trash and recycling storage and the procedure for pickup and drop-off.
e). Ventilation and air handling techniques to reduce the emission of odor or exhaust onto neighboring properties.

h. Day Care Service
Uses that provide licensed care, protection, and supervision in a protective setting for children or adults, with or without compensation, on a regular basis away from their primary residence and for less than sixteen (16) hours per day. The following are the day care service specific use types:
i. Adult Day Care Center: A day care service use providing custodial care of adults over eighteen (18) years old, related or unrelated, who are in need of supervision and/or assistance with routine daily functions but who are not in need of regular medical attention. The following standards apply:
a). All persons must be eighteen (18) years of age or older.
ii. Child Day Care Center: A day care service use providing custodial care of children under seven (7) years of age or children under sixteen (16) years of age if such children have special needs. Child day care centers include facilities operated on a regular basis as a nursery, preschool, kindergarten, child development center, head start program, before- and after-school program, and their substantial equivalents, but excludes services offered as part of the public school system; a religious education system; or a private education system not specializing in kindergarten, nursery, or related pre-school services; a family day care accessory use; or any informal cooperative arrangement for child care among neighbors or relatives, or the occasional care of children with or without compensation.

i. Maintenance & Repair of Consumer Goods
Uses that provide maintenance, cleaning, and repair services for consumer goods. Typical uses include dry cleaning shops, tailors, shoe repair, vacuum repair shops, electronics repair shops, and similar establishments.

j. Personal Services
Uses that provide a variety of services associated with personal grooming, personal instruction, and the maintenance of fitness, health, and well-being. The following personal services specific use types are regulated differently than other uses classified within the personal services use category:
i. Body Art: use of a space for the practice of physical body adornment by permitted establishments and practitioners using, but not limited to the following techniques: piercing, tattooing, cosmetic tattooing, branding and scarification. The following performance standards apply:
a). Procedures considered 'medical procedures' by the Board of Registration in medicine, such as implants under the skin, are prohibited in body-art establishments.
b). No Body Art establishment shall be located within 500 feet of another Body Art Establishment.
c). No Body Art establishment shall be located within 500 feet of an establishment selling items primarily involving 'sexual content' as defined by MGL 232 Section 31.
d). In its discretion to approve or deny a special permit authorizing a body art use, the review board shall consider the following:
i). The review considerations for all Special Permits as specified in §10.D.1.e. Review Criteria.
ii). Design of storefront windows and operations plan for ensuring the privacy of patrons.
ii. Gym or Health Club: Use of space for physical exercise or training on an individual or group basis, using exercise equipment or open floor space, with or without an option for having instruction with a personal trainer.
iii. Funeral Home: A facility where the deceased are prepared for burial display and for rituals before burial or cremation. Such facilities may include chapels, crematoriums, and showrooms for the display and sale of caskets, vaults, urns, and other items related to burial services. The following standards apply:
a). In its discretion to approve or deny a special permit authorizing a funeral home use, the review board shall consider the following:
i). The review considerations for all Special Permits as specified in §10.D.1.e. Review Criteria.
ii). Capacity of the local thoroughfare network providing access to the site and impact on pedestrian, bicycle, and vehicular traffic and circulation patterns in the neighborhood.
iii). Location, visibility, and design of the principal entrance.
iv. Health Care Provider: An office providing outpatient health services involving the diagnosis and treatment of physical or mental ailments and disorders, including doctors, dentists, mental health practitioners, physical therapists, and their substantial equivalents. The following standards apply:
a). In its discretion to approve or deny a special permit authorizing a health care provider use, the review board shall consider the following:
i). The review considerations for all Special Permits as specified in §10.D.1.e. Review Criteria.
ii). Compatibility with the level of activity associated with surrounding properties
iii). Location, visibility, and design of the principal entrance, patient drop-off areas, and outdoor amenity space for employees or patients.

k. Recreation Facility
A facility providing for the communal or solitary, active

or passive, indoor or outdoor pursuit of leisure activities. The following standards apply:

i. All outdoor lighting shall be extinguished when outdoor facilities are not in use, or by 10:00 p.m. on Sundays through Thursdays, and by 11 p.m. on Fridays and Saturdays, whichever is earlier.

ii. In its discretion to approve or deny a special permit authorizing a recreation facility use, the review board shall consider the following:

a). The review considerations for all Special Permits as specified in §10.D.1.e. Review Criteria.

b). Compatibility with the level of activity associated with the surrounding properties.

c). Capacity of the local thoroughfare network providing access to the site and impact on pedestrian, bicycle, and vehicular traffic and circulation patterns in the neighborhood.

d). Location and visibility of the principal entrance and pedestrian circulation from all exit points.

6. EATING & DRINKING USE CATEGORY

The eating & drinking principal use category includes uses that prepare or serve food or beverages for on- or off-site sale and/or consumption. The eating & drinking establishments category does not include the sale of alcohol for off-site consumption. Drive-up and drive-through service is prohibited. Outdoor cafe seating with table-service or self-service may be provided according to §6.I. Outdoor Cafe Seating. The eating & drinking establishment principal use subcategories are:

a. Bar or Tavern
An establishment, with our without live entertainment, selling alcoholic beverages for on-site consumption including, but not limited to, lounges, nightclubs, dance halls, pubs, saloons and their substantial equivalents.

i. In its discretion to approve or deny a special permit authorizing a bar or tavern use, the review board shall consider the following:

a). The review considerations for all Special Permits as specified in §10.D.1.e. Review Criteria.

b). Compatibility with the level of activity associated with the surrounding properties.

c). Noise impact and mitigation including an operational plan to limit loitering on the site.

d). Location of designated outdoor smoking areas.

e). Location of trash and recycling storage and the procedure for pickup.

b. Restaurant/Cafe/Bakery
An establishment selling prepared, ready-to-consume food and/or drinks.

c. Formula Eating and/or Drinking Establishment
Any use classified under the eating & drinking establishment use category which, along with nine (9) or more other businesses regardless of ownership or location worldwide, does or is required as a franchise, by contractual agreement, or by other arrangement to maintain two (2) or more of the following features: a standardized menu, a standardized facade, a standardized decor and/or color scheme, a standardized uniform, a standardized sign or signage, a trademark or a service mark.

i. In its discretion to approve or deny a special permit authorizing a formula eating and/or drinking establishment, the review board shall consider the following:

a). The existing concentrations of formula eating & drinking establishment uses within the neighborhood;

b). the availability of other similar eating & drinking establishment uses and the maintenance of a diverse blend of eating & drinking establishment uses within the neighborhood;

c). the compatibility of the proposed design for the formula eating & drinking establishment with the existing architectural and aesthetic character of the neighborhood;

d). the proposed uses contribution to the nationwide trend of standardized eating & drinking establishment offerings that detracts from the uniqueness of Somerville's neighborhoods; and

e). the existing non-residential vacancy rates within the neighborhood.

7. INDUSTRIAL USE CATEGORY

The industrial principal use category includes uses and activities that produce goods from raw materials, recycled components, or previously prepared sub-components, including the design, storage, and handling of these products and the materials from which they are produced; uses that provide and distribute goods in large quantities, principally to retail sales, commercial services, or other industrial establishments; as well as industrial uses that because of their scale or method of operation regularly produce odors, dust, noise, vibration, truck traffic or other external impacts that are detectable beyond the property lines of the subject property. The industrial principal use subcategories are:

a. Commercial Dry Cleaning & Laundry Services
Uses that provide centralized dry cleaning and/or laundry services for other industrial, commercial, and/or business establishments.

b. Data Center
Uses providing information storage and processing services to other businesses or end users through a collection of computer servers and related information technology infrastructure. The following standards apply:

i. In its discretion to approve or deny a special permit authorizing a data center use, the review board shall consider the following:

a). The review considerations for all Special Permits as specified in §10.D.1.e. Review Criteria.

b). Mitigation of any negative aesthetic impacts that might result from required security measures and restrictions on visibility into the building's interior.

c). Ability for the use to adequately contribute towards SomerVision's objectives for increasing employment opportunities in the city.

c. Industrial Manufacturing
Uses that process, fabricate, assemble, treat, or package

finished parts or products without the production or use in large quantities of hazardous or explosive materials. Due to the nature of operations and products, little or no noise, offensive odors, undue vibration or glare, and/or environmental pollution is produced, and, therefore, there is minimal impact on surrounding properties. Operations may include the storage of materials and the loading and unloading of new materials and finished products. Activities common to this subcategory include, but are not limited to, food and beverage production, electronics and other electrical equipment assembly, furniture and other woodworking, printing and publishing operations, and computer hardware manufacturing, and the fabrication of metal products except machinery and transportation equipment. The following standards apply:

i. The floor area of Industrial Manufacturing uses within is the Fabrication district is limited to five-thousand (5,000) square feet per establishment.

d. Moving & Self Storage

Uses engaged in the moving of household or office furniture, appliances, and equipment from one location to another, including the temporary storage of those same items. Typical uses include moving companies and self-service and mini-storage warehouses. The following moving & self storage specific use types are regulated differently than other uses classified within the moving & self storage subcategory:

i. Self Storage: The temporary storage of personal possessions in containers or individual rentable or leaseable spaces. The following standards apply:
   a). A self storage use is only permitted in a building with more than one principal use.
   b). In its discretion to approve or deny a special permit authorizing a self storage use, the review board shall consider the following:
      i). The review considerations for all Special Permits as specified in §10.D.1.e. Review Criteria.
      ii). Mitigation of any negative aesthetic impacts that might result from required security measures and restrictions on visibility into the building's interior.
      iii). Location of loading, trash and recycling storage, and the procedure for drop-off and pickup.
      iv). Ability for the use to adequately contribute towards SomerVision's objectives for increasing employment opportunities in the city.
      v). Abnormal site conditions that make the less than desirable for other uses.

e. Recycling Collection

Uses that collect and temporarily store recyclable household materials including glass, cardboard, paper, aluminum, tin, and plastics that are regularly moved off-site to be processed elsewhere. The following standards apply:

i. In its discretion to approve or deny a special permit authorizing a recycling collection use, the review board shall consider the following:
   a). The review considerations for all Special Permits as specified in §10.D.1.e. Review Criteria.
   b). Compatibility with the level of activity associated with the surrounding properties.
   c). Capacity of the local thoroughfare network providing access to the site.
   d). Location and screening of loading, the procedure for drop-off and pickup, and the impact on pedestrian, bicycle, and vehicular traffic and circulation patterns in the neighborhood.
   e). Visual impact and quality of screening of parked business vehicles.

f. Salvage Yard

An area or building where waste or scrap materials are bought, sold, exchanged, stored, baled, packed, disassembled, or handled for reclamation, disposal or other like purposes, including but not limited to scrap iron and other metals, paper, rags, rubber tires, and bottles. A junk or salvage yard or building includes an auto wrecking yard or building.

g. Trucking & Transportation Depot

Uses engaged in the dispatching and long-term or short-term storage of large vehicles. Minor repair and maintenance of vehicles stored on the premises is also included. The following standards apply:

i. In its discretion to approve or deny a special permit authorizing a trucking & transportation depot use, the review board shall consider the following:
   a). The review considerations for all Special Permits as specified in §10.D.1.e. Review Criteria.
   b). Compatibility with the level of activity associated with the surrounding properties.
   c). Capacity of the local thoroughfare network providing access to the site and impact on pedestrian, bicycle, and vehicular traffic and circulation patterns in the neighborhood.
   d). Location of driveway entrances and access points in relation to the safety of pedestrians, bicyclists, and motor vehicles.
   e). Sight lines needed by the driver of any vehicle entering or exiting the site.
   f). Visual impact and quality of screening of parked business vehicles.
   g). Ventilation and air handling techniques to reduce the emission of odor or exhaust onto neighboring properties.

h. Wholesale Trade & Distribution

Uses engaged in the wholesale sales, bulk storage and distribution of goods including, but not limited to, furniture & home furnishings; professional and commercial equipment; electrical goods; hardware, plumbing, and heating equipment; paper and paper products; sundries; apparel; food and beverages; healthcare equipment and supplies; and their substantial equivalents to retailers, commercial services, and/or industrial businesses. The following standards apply:

i. Ancillary retail sales and wholesale showrooms are permitted.
ii. Activities may include physically assembling, sorting, and grading goods into large lots and breaking bulk for redistribution in smaller lots in

such a way that has minimal impact on surrounding properties.

iii. The wholesale and/or storage or warehousing of toxic and/or hazardous materials is prohibited.

8. LODGING USE CATEGORY

The lodging principal use category includes uses characterized by visitor-serving facilities that provide temporary lodging in guest rooms or guest units, for compensation. Ancillary facilities for the exclusive use by guests including pools, limited storage, restaurants, bars, meeting rooms, and offices are permitted. The lodging principal use subcategories include:

a. Bed & Breakfast
A single unit residential structure providing rooms for temporary, overnight lodging, with or without meals, for paying guests. The following standards apply:
   i. A bed & breakfast lodging use is only permitted in an owner-occupied or manager-occupied historic structure located within a designated Local Historic District.
   ii. A bed & breakfast lodging use may be located within a principal building or an accessory structure.
   iii. A common gathering space, such as a parlor, dining room, or living room must be maintained for guest use.
   iv. Cooking facilities are not permitted in guest rooms.
   v. In its discretion to approve or deny a special permit authorizing a bed & breakfast use, the review board shall consider the following:
      a). The review considerations for all Special Permits as specified in §10.D.1.e. Review Criteria.
      b). Mobility management options provided to guests and the on-site management of parking.
      c). Compliance with the Somerville Historic Preservation Commission's requirements and guidelines for any alterations to the structure or site.
      d). Operational procedures for limiting noise impacts on neighboring properties.

b. Hotel or Hostel
A building providing temporary lodging in guest rooms or apartments to persons who have residences elsewhere for a fee. The following standards apply:
   i. Hotel or Hostel employees must be on-site at all times.
   ii. A hostel must be associated with a national or international hostel organization.
   iii. In its discretion to approve or deny a special permit authorizing a hotel use, the review board shall consider the following:
      a). The review considerations for all Special Permits as specified in §10.D.1.e. Review Criteria.
      b). Compatibility with the level of activity associated with the surrounding properties.
      c). Capacity of the local thoroughfare network providing access to the site and impact on pedestrian, bicycle, and vehicular traffic and circulation patterns in the neighborhood.
      d). Location and visibility of the principal entrance, guest drop-off area, taxi queuing station, outdoor amenity space for guests or employees, and pedestrian circulation from all exit points.

c. Short Term Rental of a Dwelling Unit
The rental of a dwelling unit on an overnight or short-term basis of typically less than seven (7) days. The following standards apply:
   i. The dwelling unit offered for rent must be in an owner occupied building and the owner must be present when the rental is in use by guests.
   ii. The unit must be provided with the following:
      a). House rules establishing quiet hours, the maximum number of guests, and clean-up requirements for guest pets, if allowed.
      b). A functioning fire extinguisher.
      c). Child-proofed electrical outlets.
      d). A map identifying fire escape routes.
      e). Directions for operating the temperature control system.
      f). Emergency contact information.

9. OFFICE USE CATEGORY

The office principal use category includes uses and activities that perform administrative, professional, or clerical operations. The office principal use subcategories are:

a. Co-Working
A commercial or non-profit organization providing individuals and small firms access to workplace facilities, including but not limited to, creative studios, office suites, for-rent 'hot-desks', dedicated workstations, conference rooms, meeting rooms, event space, resource libraries, and business or administrative support services.

b. General Office
The regular processing, manipulation, or application of business information or professional expertise predominantly for administrative, professional, and clerical operations in accounting, advertising, business to business brokerage and other business support services, employment, finance, healthcare administration, information technology and/or services, insurance, internet content development and publishing, law, real estate, urban development and their substantial equivalents. Office activities may or may not provide direct services to the public. The following standards apply:
   i. Office uses do not include activities materially involved in fabricating, assembling, or warehousing physical products for the retail or wholesale market.

c. Research & Development and/or Laboratory
The analysis, testing, and development of products, or services predominantly for scientific research operations in biotechnology, pharmaceuticals, medical equipment, communication & information technology, electronics, computer hardware, and their substantial equivalents. The following standard apply:
   i. Research & Development and/or Laboratory does not include activities involved in fabricating, assembling, warehousing, or sale of products for the retail or wholesale market.
   ii. Ancillary development of mock-up and prototype

products is permitted so long as the total floor area devoted to their fabrication or assembly is limited to twenty-five percent (25%) to the gross floor area occupied by the use.

10. RESIDENTIAL USE CATEGORY

The residential principal use category includes uses that provide living accommodations for one or more persons in a principal building type. Residential use of an accessory structure is prohibited. The residential principal use subcategories are:

a. Household Living
Residential occupancy of a building in dwelling units by a individual or two (2) or more persons related by blood, marriage, or adoption and no more than four (4) unrelated persons, where tenancy is either by ownership or rented on a month-to-month basis or longer. Uses where tenancy is arranged for time periods shorter than one month are considered Lodging uses. See §5.B.8. Lodging Use Category and §5.C.3. Lodging Accessory Use Category for more information.

b. Group Living
Residential occupancy of a building that is not categorized as household living and that typically provides shared or communal kitchen, dining, or bathroom facilities. The following group living specific use types are regulated differently than other uses classified within the group living subcategory:

i. Community or Group Residence: A residential use of four (4) or more unrelated individuals occupying a dwelling unit and living as a single housekeeping unit, if said occupants are handicapped persons as defined in Title VIII of the Civil Rights Act of 1968, as amended by the Fair Housing Amendments Act of 1988. This act defines "handicap", with respect to a person, as: 1) a physical or mental impairment which substantially limits one (1) or more of such person's major life activities, 2) a record of having such an impairment, or 3) being regarded as having such an impairment, but such term does not include current, illegal use of or addiction to a controlled substance.

ii. Dormitory, Fraternity, or Sorority: Residential housing exclusively occupied by full- or part-time students and/or educational staff and/or group living facilities owned or operated by an educational institution.

a). In its discretion to approve or deny a special permit authorizing a dormitory, fraternity, or sorority use, the review board shall consider the following:

i). The review considerations for all Special Permits as specified in §10.D.1.e. Review Criteria.

ii). Proximity of the primary educational institution to the site.

iii). Concentration of dormitories, fraternities, or sororities in the neighborhood.

iii. Homeless Shelter: A facility that has a primary function of providing overnight sleeping accommodations for homeless people.

iv. Nursing Home/Assisted Living: An establishment which maintains and operates continuous day and night facilities providing room and board, personal services, and skilled nursing care. Nursing homes include hospice care, but specifically exclude hospitals.

a). In its discretion to approve or deny a special permit authorizing a nursing home use, the review board shall consider the following:

i). The review considerations for all Special Permits as specified in §10.D.1.e. Review Criteria.

ii). Characteristics of the local thoroughfare network in providing a walkable environment and access for emergency vehicles.

iii). Location, visibility, and design of the principal entrance, resident drop-off area, and outdoor amenity spaces.

iv). Provision of communal indoor seating areas with a direct line of site to the outdoors.

v. Single Room Occupancy Housing (SRO): A residential use that provides four (4) or more rental boarding rooms for four (4) or more unrelated individuals for occupancy longer than a 14-day period. Single room occupancy housing includes boarding houses, lodging houses, and rooming houses. The following standards apply:

a). A license from the Board of Aldermen is required.

b). The unit must be provided with the following:

i). House rules establishing quiet hours, the maximum number of guests, and clean-up requirements for guest pets, if allowed.

ii). A functioning fire extinguisher.

iii). Child-proofed electrical outlets.

iv). A map identifying fire escape routes.

v). Directions for operating the temperature control system.

vi). Emergency contact information.

c). In its discretion to approve or deny a special permit authorizing the short term rental of a dwelling unit, the review board shall consider the following:

i). The review considerations for all Special Permits as specified in §10.D.1.e. Review Criteria.

ii). Path of access to the unit and the privacy of residents and neighboring properties.

iii). Location of designated outdoor smoking areas.

iv). Operations plan for maintaining the unit, including the inspection schedule for smoke and carbon monoxide detectors and the hours of operation for cleaning services.

11. RETAIL USE CATEGORY

The retail principal use category includes activities involving the sale, lease, or rental of new or used goods to the ultimate consumer. The retail principal use subcategories are:

a. Building/Home Supplies & Equipment

Uses that sell or otherwise provide furniture, appliances, equipment, and/or home improvement goods needed to repair, maintain, or visually enhance a structure or premises that are, typically, too large to be carried by hand. The following standards apply:

i. Outdoor display of products and merchandise is permitted according to the following:
   a). Outdoor display is permitted in any storefront frontage or on a public sidewalk subject to all City Ordinances as an ancillary activity.
   b). Outdoor display must be removed and placed inside a fully-enclosed building at the end of each business day.
   c). Display areas extending more than eight feet from the facade are prohibited.
   d). A minimum four (4) foot wide clear path of access must be maintained to the principal entrance.
   e). Display areas are permitted to occupy no more than 30% of the frontage area.
   f). Display areas must comply with the sidewalk standards of Article 8 Public Realm Standards.

ii. In its discretion to approve or deny a special permit authorizing a building/home supplies & equipment retail use, the review board shall consider the following:
   a). The review considerations for all Special Permits as specified in §10.D.1.e. Review Criteria.
   b). Location of driveways entrances and access points in relation to the safety of pedestrians, bicyclists, and motor vehicles.
   c). Capacity of the local thoroughfare network providing access to the site and impact on pedestrian, bicycle, and vehicular traffic and circulation patterns in the neighborhood.
   d). Location of loading, trash and recycling storage, and the procedure for drop-off and pickup.

b. Consumer Goods

Uses that sell or otherwise provide consumer goods, functional or decorative, for use in entertainment, comfort, or aesthetics which are of a size that a customer can typically carry by hand. Consumer goods stores include, but are not limited to, stores selling apparel and accessories, sundries, pharmaceuticals, hardware and hand tools, housekeeping supplies, and convenience food and beverage for off-site consumption. The manufacturing, assembly, and/or packaging of merchandise is prohibited unless ancillary to the sale of products from the same location. The following standards apply:

i. Outdoor display of products and merchandise is permitted according to the following:
   a). Outdoor display is permitted in any storefront frontage or on a public sidewalk subject to all City Ordinances as an ancillary activity.
   b). Outdoor display must be removed and placed inside a fully-enclosed building at the end of each business day.
   c). Display areas extending more than eight feet from the facade are prohibited.
   d). A minimum four (4) foot wide clear path of access must be maintained to the principal entrance.
   e). Display areas are permitted to occupy no more than 30% of the frontage area.
   f). Display areas must comply with the sidewalk standards of Article 8 Public Realm Standards.

The following consumer goods specific use types are regulated differently than other uses classified within the consumer goods subcategory:

ii. Drug Paraphernalia Store: A store selling equipment, products, and materials of any kind which are used, intended for use, or designed for use in the production, cultivation, harvesting, processing, packaging, testing, or introducing into the human body a controlled substance.

iii. Firearms: A store selling, transferring, or leasing; or advertising for sale, transfer, or lease, or offering or exposing for sale, transfer, or lease, any firearm and/or ammunition.

iv. Packaged Liquor: Any alcoholic beverage sales establishment primarily involving the sale of alcohol where beer, wine or distilled spirits are sold for off-sale consumption and where more than five (5) percent of the floor area of the establishment is devoted to the sale, display or storage of beer, wine or distilled spirits.
   a). In its discretion to approve or deny a special permit authorizing a packaged liquor use, the review board shall consider the following:
      i). The review considerations for all Special Permits as specified in §10.D.1.e. Review Criteria.
      ii). Concentration of packaged liquor uses in the neighborhood.

v. Medical Marijuana Facility: Uses that relate to acquiring, cultivating, possessing, processing (including development of related products such as food, tinctures, aerosols, oils, or ointments), transferring, transporting, selling, distributing, dispensing, or administering marijuana, products containing marijuana, related supplies, or educational materials to qualifying patients or their personal caregivers. The following standards apply:
   a). All medical marijuana facilities must be properly registered with the Massachusetts Department of Public Health pursuant to 105 CMR 725.100 and must comply with all applicable state and local public health regulations and all other applicable state and local laws, rules, and regulations.
   b). In its discretion to approve or deny a special permit authorizing a medical marijuana facility, the review board shall consider the following:
      i). The review considerations for all Special Permits as specified in §10.D.1.e. Review Criteria.
      ii). Location of dispensary serves an area that currently does not have reasonable access to medical marijuana, or if it is proposed to serve an area that is already served by other Registered Marijuana Dispensaries, it has been established

by the Massachusetts Department of Public Health that supplemental service is needed.

iii). The site is located at least five hundred (250) feet distant from a school, daycare center, preschool or after school facility or any facility in which children commonly congregate, or if not located at such a distance, it is determined by the Review Board to be sufficiently buffered from such facilities such that its users will not be adversely impacted by the operation of it.

iv). Impact of expected origin and frequency of client and employee trips to the site, the expected modes of transportation used by clients and employees, and the frequency and scale of deliveries to and from the site.

v). Site is designed such that it provides convenient, safe, and secure access and egress for clients and employees arriving to and leaving from the site using all modes of transportation, including drivers, pedestrians, bicyclists and public transportation users.

vi). Building, site and sign design to be compatible with the character of other buildings in the area and mitigate any negative aesthetic impacts that might result from required security measures and restrictions on visibility into the building's interior.

vii). Loading, trash and recycling location and screening.

viii). Limiting the special permit term to the duration of the applicant's ownership of the premises as a Medical Marijuana Facility. A special permit may be transferred only with the approval of the Review Board in the form of an amendment to the special permit with all required information.

vi. Pet Store: Uses that sell or otherwise provide household pets. The following standards apply:

a). The ancillary sale of pet supplies is permitted.

b). In its discretion to approve or deny a special permit authorizing a pet store use, the review board shall consider the following:

i). The review considerations for all Special Permits as specified in §10.D.1.e. Review Criteria.

ii). Building methods or techniques for noise mitigation to limit noise for other users of the building and abutters.

c. Formula Retail

Any use classified under the retail sales use category which, along with nine (9) or more other businesses regardless of ownership or location worldwide, does or is required as a franchise, by contractual agreement, or by other arrangement to maintain two (2) or more of the following features: a standardized array of merchandise, a standardized facade, a standardized decor and/or color scheme, a standardized uniform, a standardized sign or signage, a trademark, or a service mark.

i. In its discretion to approve or deny a special permit authorizing a formula retail use, the review board shall consider the following:

a). The review considerations for all Special Permits as specified in §10.D.1.e. Review Criteria.

b). The existing concentrations of formula retail uses within the neighborhood;

c). The availability of other similar retail uses and the maintenance of a diverse blend of retail uses within the neighborhood;

d). The compatibility of the proposed formula retail use with the existing architectural and aesthetic character of the neighborhood;

e). The proposed uses contribution to the nationwide trend of standardized retail offerings that detracts from the uniqueness of Somerville's neighborhoods; and

f). The existing non-residential vacancy rates within the neighborhood.

d. Fresh Food Market or Grocery Store

The self-service sales of food and household products including, but not limited to, fresh and prepared meat, dairy, baked goods, fresh fruits and vegetables, canned and/or frozen foods, and other regularly consumed household products. The following standards apply:

i. Floor area devoted to the sale of non-food items must not exceed twenty-five percent (25%) of the sales floor.

ii. Ancillary prepared food and beverage service is permitted.

e. Farmer/Vendor Market

The direct sales of goods and/or products by farmers or vendors to consumers from individual booths, tables, or stands, whether indoors or outdoors.

12. URBAN AGRICULTURE USE CATEGORY

The urban agriculture principal use category includes a range of food growing practices including farming and the keeping of chickens and/or bees, but not other types of live stock. Urban agriculture uses that are accessory to residential uses on the same lot are regulated by §5.C.4. Urban Agriculture Accessory Use Category. The urban agriculture principal use subcategories are:

a. Farming

The cultivation of soil and the production, planting, caring for, treating, growing, and harvesting of any aquacultural, horticultural, hydrocultural commodities. The farming specific use types are:

i. Commercial Farming: Farming for the purpose of selling produce for a profit.

a). Sales are subject to compliance with local, state, and federal regulations.

b). Commercial farming may be conducted outdoors, in a greenhouse, or on the roof of a principal or accessory structure.

c). Notwithstanding Table 5.1, Commercial Farming is permitted on Municipally owned land and/or within Municipal Buildings by-right.

ii. Community Farming: Farming by a non-profit agency with the intent of selling produce.

a). Sales are subject to compliance with local,

state, and federal regulations.

b. Community Gardening
The practice of growing and cultivating plants; including vegetables, flowers, and fruits; for display, enjoyment, or private/personal consumption. The following standards apply:
   i. Sales, processing, and storage of plants or plant products are prohibited on site.

C. ACCESSORY USE CATEGORIES

1. GENERAL

a. This section defines the categories, subcategories, and specific types of accessory uses.
b. In some cases, use-specific regulatory or performance standards are identified.
c. Compliance with use-specific regulatory or performance standards is required regardless of whether the use is permitted by-right or by special permit.
d. Accessory uses may not be established prior to the establishment of a permitted principal use.
e. The Building Official shall determine when a use is accessory to the principal use of a lot. To determine that a use is accessory, the Building Official must find that the use:
   i. is clearly incidental and subordinate to the principal use in terms of area and function;
   ii. contributes to the comfort, convenience, or necessity of occupants of the principal structure or principal use served;
   iii. is operated and maintained under the same ownership and on the same lot as the principal use, or on a contiguous lot in the same ownership;
   iv. will not attract visitors in larger numbers than would be normally expected of principal uses permitted in the district; and
   v. does not produce offensive noise, vibration, smoke, dust or other particulate matter, heat, humidity, glare, or other objectionable effects.

2. HOME OCCUPATIONS ACCESSORY USE CATEGORY

The home occupations accessory use category includes limited business activities carried out incidental to a household living principal use. Home occupations include, but are not limited to, the office of an architect, attorney, engineer, instructor, realtor, sales representative, software developer, teacher and their substantial equivalents that do not involve persons regularly visiting the property for business purposes, but instead primarily involves the operator visiting clients off-site. The following uses are not considered a home occupation: auto or appliance repair, contractor's shop or storage, barber shop, beauty parlors, commercial stables or kennels, medical or dental office, body art, massage, or acupuncture.

a. The following standards apply to all home occupation accessory uses:
   i. Home occupations must be operated within a completely enclosed principal or accessory building type owned or occupied by the resident of the property where the home occupation is located.
   ii. No storage of materials, supplies, or equipment is permitted outdoors.
   iii. The production of offensive noise, vibration, glare, odors, parking/loading demands, traffic, or other negative impacts that unreasonably interfere with any person's "quiet expectations" in enjoyment of their residence is prohibited.
   iv. No display of products may be visible from the right-of-way of any public thoroughfare.
   v. Shipping and delivery is restricted to parcel and small freight carriers.
   vi. No more than one off-street parking space is permitted for the home occupation.
   vii. Home occupations conducted in an accessory structure are limited in size by the provisions governing the accessory building type (see Garage or Workshop).
   viii. Products produced on-site must be grown, fabricated, or assembled by hand.
   ix. Home occupations use must be operated by the occupant of dwelling unit on the lot.
b. The home occupation accessory use subcategories are:
   i. Creative Studio: A home occupation that generates and exploits intellectual property through individual creativity, skill, and talent; creates, produces, distributes, rehearses, performs, sells, and/or teaches the visual arts, performing arts, applied arts, literature, heritage, media, or music; or creates, produces, invents, designs, develops or prototypes content, goods, or products.
   ii. Family Day Care: A home occupation providing custodial care of children under seven (7) years of age or children under sixteen (16) years of age if such children have special needs. Family day care does not include the informal cooperative arrangement for child care among neighbors or relatives, or the occasional care of children with or without compensation. The following standards apply:
      a). Care may be provided for no more than six (6) children at a time, including any children living with the residence providing family day care services.
   iii. Hobby Kennel: A home occupation involving the raising and care of four (4) or more dogs, excluding puppies younger than three (3) months, for breeding, sale, training, show, hunting, and other related purposes except boarding. The following standards apply:
      a). No more than six (6) dogs, excluding puppies younger than three (3) months, are permitted.
      b). All dogs must be licensed and vaccinated as required under the City's laws.
      c). The site will be subject to inspection at reasonable times by the Animal Control Officer to ensure that the standards and conditions of approval of a special permit are met.
      d). Boarding of animals or other commercial uses of the site are not permitted.
      e). Dog waste must be disposed of daily, either sealed and disposed of with trash or in a maintained enzymatic dog waste system.
      f). In its discretion to approve or deny a special permit authorizing a hobby kennel home occupation use, the review board shall consider the following:
         i). The review considerations for all Special Permits as specified in §10.D.1.e. Review Criteria.
         ii). Design of confinement of dogs to the property.
         iii). Design and size of the site to accommodate the safety and comfort of

dogs.
iv). Amount of on-site landscaping.
v). Operational procedure for controlling barking, particularly between the hours of 9pm and 7am, including hours that the dogs are outside, proper training and frequency of walks.

iv. Home-Based Business: An home occupation carried on by the resident of a dwelling unit, where the occupation is secondary to the use of the dwelling unit for residential purposes and where the "quiet expectations" of neighbors take precedence over work needs of the occupation in question. The following standards apply:
a). No more than one non-resident employee may be present at any one time during the hours of operation.
b). Retails sales to walk-in customers are prohibited.
c). Client visits must be by appointment only and business activities may not have more than one (1) visitor car at a time.

v. Home Office: A home occupation conducted solely by the residents of the dwelling unit without the employment of other persons. The following standards apply:
a). All sales, services or work that requires the presence of a partner, employee, or customer shall take place off-site.

3. LODGING ACCESSORY USE CATEGORY

The lodging accessory use category includes any provision of temporary lodging to visitors for compensation. The lodging accessory use subcategories are:

a. Tourist Home
The rental up to two (2) sleeping rooms of a dwelling unit on an overnight or short-term basis of typically less than seven (7) days.

4. URBAN AGRICULTURE ACCESSORY USE CATEGORY

The urban agriculture accessory use category includes a range of food growing practices including farming and the keeping of chickens and/or bees, but not other types of live stock. The urban agriculture accessory use subcategories are:

a. Apiculture: The maintenance of honey bee colonies, commonly in hives. The following performance standards apply:
i. Apiculture is subject to all applicable rules and regulations established by the Health Department of the City of Somerville.
ii. Bee species shall be restricted to the common domestic honeybee (Apis mellifera).
iii. Ownership, care, and control is the responsibility of a resident of a dwelling unit on the lot.
iv. A maximum of two colonies may be kept on a lot. Health regulations may further limit the number and/or manner that bees are kept.
v. Honeybees and beekeeping materials are not permitted within 20 feet of a front lot line.
vi. The on site sale of honey produced on site is permitted between the hours of 7:00am to 9:00pm, May 1st through October 31st and shall be limited to no more than 3 days per week for a total of twenty-five (25) days per year.

b. Aviculture: The raising and care of birds. The following performance standards apply:
i. Aviculture is subject to all applicable rules and regulations established by the Health Department of the City of Somerville.
ii. Bird species shall be restricted to the common domestic chicken (Gallus gallus domesticus), specifically hens.
iii. Roosters are prohibited.
iv. Ownership, care, and control is the responsibility of a resident of a dwelling unit on the lot.
v. A maximum of six (6) hens may be kept on a lot. Health regulations may further limit the number and/or manner that hens are kept.
vi. Hens are not permitted within 20 feet of a front lot line.
vii. The on site sale of eggs produced on site is permitted between the hours of 7:00am to 9:00pm, May 1st through October 31st and shall be limited to no more than 3 days per week for a total of twenty-five (25) days per year.

c. Commercial Farming: The cultivation of soil and the production, planting, caring for, treating, growing, and harvesting of any aquacultural, horticultural, and/or hydrocultural commodities. The following performance standards apply:
i. Farming is subject to all applicable rules and regulations established by the Health Department of the City of Somerville.
ii. Sales are subject to compliance with local, state, and federal regulations.
iii. Commercial farming may be conducted outdoors, in a greenhouse, or on the roof of a principal or accessory structure.
iv. Ownership, care, and control of an outdoor, greenhouse, or roof farm is the responsibility of a resident of a dwelling unit on the lot.
v. The on site sale of agricultural commodities produced on site is permitted between the hours of 7:00am to 9:00pm, May 1st through October 31st and shall be limited to no more than 3 days per week for a total of twenty-five (25) days per year.
vi. Proof of annual soil testing is required to be posted during all sales.

d. Residential Gardening: The practice of growing and cultivating plants; including vegetables, flowers, and fruits; for display, enjoyment, or private/personal consumption. The following performance standards apply:
i. Sales are prohibited.
ii. Gardening may be conducted outdoors, in a greenhouse, or on the roof of a principal or accessory structure.
iii. Ownership, care, and control is the responsibility of a resident of a dwelling unit on the lot.

5. VEHICULAR PARKING ACCESSORY USE CATEGORY

The vehicular parking accessory use category includes any storage, for a limited period of time, of operable motor vehicles. The vehicular parking accessory use subcategories

are:

a. Accessory Parking
Off-street parking for motor vehicles that is accessory to and supports a principal use. See §7.B. Motor Vehicle Parking for more information.

b. Bike-Share
Parking for bicycles that are made available for an hourly rental fee as part of a business operating ten (10) or more pick-up and return stations within the City of Somerville or surrounding municipalities. The following standards apply:
   i. Parking stations must not interfere with the reasonable visibility needs of drivers, the flow of pedestrians traffic, or needs of businesses on the same site.

c. Car-Share Parking
Parking for automobiles, small trucks, and vans that are made available for hourly rental fee.
   i. In its discretion to approve or deny a special permit authorizing a car-share parking use, the review board shall consider the following:
      a). The review considerations for all Special Permits as specified in §10.D.1.e. Review Criteria.
      b). Compliance with any minimum parking requirement of this Ordinance.
      c). Privacy of on-site or abutting residential uses from the route of pedestrian access to the car-share parking space.

d. Business Vehicle Parking
Parking for motor vehicles owned and operated in connection with a business in an off-street parking area that is accessory to a residential use. The following standards apply:
   i. Only one business-related vehicle is permitted and must not exceed a one-ton carrying capacity.
   ii. Tow-trucks are prohibited.

6. RESIDENTIAL ACCESSORY USE CATEGORY

The residential accessory use category includes residential uses that are a-typical of the originally established residential dwelling patterns in the city but recognized as necessary to address increasing housing demand.

a. Secondary Dwelling Unit
A for-rent basement unit owned in common with another on-site, owner occupied dwelling unit. The following standards apply:
   i. A secondary dwelling unit must be located in the finished basement of a cottage, house, duplex, or paired house building type.
   ii. The size of a secondary dwelling unit must be limited to the floor plate of the main body of the building.
   iii. Residential occupancy by more than two (2) unrelated persons is prohibited.
   iv. Minimum parking requirements do not apply.
   v. Parking spaces for secondary dwelling units must be rented, leased, or sold as an option rather and a requirement of the rental, lease, or purchase of a dwelling unit or non-residential floor space.
   vi. In its discretion to approve or deny a special permit authorizing a secondary dwelling unit, the review board shall consider the following:
      a). The review considerations for all Special Permits as specified in §10.D.1.e. Review Criteria.
      b). Quality of the living space in terms of functional area, access to light, and air circulation.
      c). Path of access to the unit and the privacy of on-site residents and neighboring properties.
      d). Design and necessity of exterior alterations to make the unit possible.

D. USE TABLES

1. GENERAL

a. The use of real property is regulated according to Table 5.1 and Table 5.2. Accessory Uses.
b. Real property may have one or more principal uses established. Each use must comply with any use-specific regulations and/or performance standards applicable for each use.
c. Some building types include further limitations and restrictions on the uses permitted for each type. See Article 3. Building Standards for more information.
d. The use of real property is limited to specific use categories for lots abutting a block face designated on the Pedestrian streets map. See Article 8: Public Realm Standards and the Pedestrian Streets Map for more information.

2. PROTECTED USES

a. Nothing contained in this Article shall be construed to restrict the use of land or structures for religious or educational activities per M.G.L. Chapter 40A, Section 3. In cases where Table 5.1 indicates the use of real property for religious or educational purposes is not permitted or requires a special permit on land owned or leased by the Commonwealth of Massachusetts, a religious sect or denomination, or by a non-profit educational corporation, that use shall be permitted by-right and is subject only to the provisions for the appropriate building type (see Article 3. Building Standards).

3. UNDERSTANDING THE USE TABLES

a. Categorization System
   i. Use categories, subcategories, and/or specific uses are identified in the first column of the use table.
   ii. Uses permitted in Special Districts are established in Article 4: Special Districts. Applicable definitions, performance standards, and special permit considerations shall apply.
b. Zoning Districts
   i. Zoning districts are identified by name in the top row of the table.
c. Permitted Uses (P)
   i. Uses identified with a "Y" are permitted by-right in the zoning district indicated upon the granting of a zoning permit certifying when conforming to all applicable provisions of this Ordinance.
d. Limited Uses (L)
   i. Uses identified with an "L" are permitted by-right in the zoning district indicated, but must comply with the use specific standards identified in the last column of the use table in addition to all other applicable provisions of this Ordinance.
e. Special Permit Uses (SP)
   i. Uses identified with an "SP" are permitted in the zoning district indicated if granted a Special Permit according to the provisions of §10.D.1. Special Permit.
   ii. Uses permitted by special permit must comply with any use-specific standards identified in the final column of the use table in addition to all other applicable provisions of this Ordinance.
f. Prohibited Uses
   i. Uses identified with an "N" are prohibited.
g. Use Specific Standards
   i. A cross-reference of use-specific regulations and/or performance standards is identified in the last column of the use table for each category, subcategory, and/or specific type of use when applicable.

TABLE X. Sample Use Table

Y - by Right
L - by Right with Limitations
SP - by Special Permit
N - NOT Permitted

USE CATEGORY	District Name	District Name	District Name	District Name	District Name	District Name	District Name	Use Specific Regulations and/or Performance Standards
Use Subcategory	Y	Y	Y	Y	Y	Y	Y	§1.a.i. (for example)
Use Subcategory (except as noted below)	L	L	L	L	L	L	L	
Specific Use Type A	SP	SP	SP	SP	SP	SP	SP	
Specific Use Type B	N	N	N	N	N	N	N	
Use Subcategory (as noted below)	--	--	--	--	--	--	--	
Specific Use Type A	Y	Y	Y	Y	L	L	L	
Specific Use Type B	N	N	N	N	SP	SP	SP	

TABLE 5.1 Principal Uses

Y - by Right
L - by Right with Limitations
SP - by Special Permit
N - NOT Permitted

	Neighborhood Residence	Urban Residence	3-Story Mixed-Use	4-Story Mixed-Use	5-Story Mixed-Use	7-Story Mixed-Use	10-Story Mixed-Use	Fabrication	Commercial Industry	Civic	Use Specific Standards
ARTS & CREATIVE ENTERPRISE											
Artisan Production	N	N	L	L	L	L	L	Y	Y	N	§5.B.2.a. Artisan Production
Arts Exhibition	N	N	Y	Y	Y	Y	Y	Y	Y	N	§5.B.2.b. Arts Exhibition
Arts Sales & Services	N	N	L	L	L	L	L	Y	Y	N	§5.B.2.c. Arts Sales & Services
Creative Studio	L	L	N	N	N	N	N	N	N	N	§5.B.2.d. Creative Studio
Design Services	N	N	Y	Y	Y	Y	Y	Y	Y	N	§5.B.2.e. Design Services
Shared Workspaces & Arts Education	N	N	Y	Y	Y	Y	Y	Y	Y	N	§5.B.2.f. Shared Workspaces & Arts Education
Work/Live Creative Studio	N	N	N	N	N	N	N	SP	N	N	§5.B.2.g. Work/Live Creative Studio
AUTO-ORIENTED											
Commercial Vehicle Repair & Maintenance	N	N	N	N	N	N	N	N	Y	N	§5.B.3.a. Commercial Vehicle Repair & Maintenance
Dispatch Service (except as noted below)	N	N	N	N	N	N	N	N	Y	N	§5.B.3.b. Dispatch Service
Towing Service	N	N	N	N	N	N	N	N	SP	N	§5.B.3.b.i. Towing Service
Gasoline Station	N	N	N	N	N	N	N	N	N	N	§5.B.3.c. Gasoline Station
Motor Vehicle Parking (as noted below)	--	--	--	--	--	--	--	--	--	--	§5.B.3.d. Motor Vehicle Parking
Car Share Parking	N	SP	SP	SP	SP	SP	SP	SP	Y	N	§5.B.3.d.i. Car-Share Parking
Commercial Parking	N	N	SP	SP	SP	SP	SP	N	Y	N	§5.B.3.d.ii. Commercial Parking
Off-Site Accessory Parking	SP	SP	SP	SP	SP	SP	SP	N	Y	N	§5.B.3.d.iii. Off-Site Accessory Parking
Personal Vehicle Repair & Maintenance	N	N	N	N	N	N	N	N	Y	N	§5.B.3.e. Personal Vehicle Repair & Maintenance
Vehicle Sales	N	N	N	N	N	N	N	N	Y	N	§5.B.3.f. Vehicle Sales
CIVIC & INSTITUTIONAL											
Community Center	N	N	Y	Y	Y	Y	Y	Y	N	N	§5.B.4.a. Community Center
Educational Facility	N	N	Y	Y	Y	Y	Y	Y	N	N	§5.B.4.b. Educational Facility
Hospital	N	N	SP	SP	SP	SP	SP	N	SP	N	§5.B.4.c. Hospital
Library	N	N	Y	Y	Y	Y	Y	Y	N	N	§5.B.4.d. Library
Minor Utility Facility	N	N	SP	SP	SP	SP	SP	N	N	N	§5.B.4.e. Minor Utility Facility
Major Utility Facility	N	N	N	N	N	N	N	N	N	N	§5.B.4.f. Major Utility Facility
Museum	N	N	Y	Y	Y	Y	Y	Y	N	N	§5.B.4.g. Museum
Private Non-Profit Club or Lodge	SP	SP	SP	SP	SP	SP	SP	SP	SP	N	§5.B.4.h. Private, Non-Profit Club or Lodge
COMMERCIAL SERVICES											
Animal Services (as noted below)	--	--	--	--	--	--	--	--	--	--	§5.B.5.a. Animal Services
Pet Grooming	N	N	Y	Y	Y	Y	Y	N	N	N	§5.B.5.a.i. Pet Grooming
Pet Training, Care, or Shelter	N	N	N	N	N	N	N	N	Y	N	§5.B.5.a.ii. Pet Training, Care, or Shelter
Veterinarian	N	N	SP	SP	SP	SP	SP	N	SP	N	§5.B.5.a.iv. Veterinarian
Assembly & Entertainment	N	N	SP	SP	SP	SP	SP	N	SP	N	§5.B.5.b. Assembly and Entertainment
Banking & Financial Services (except as noted below)	N	N	Y	Y	Y	Y	Y	N	Y	N	§5.B.5.c. Banking & Financial Services
Personal Credit	N	N	SP	SP	SP	SP	SP	N	SP	N	§5.B.5.c.i. Personal Credit
Broadcast and/or Recording Studio	N	N	Y	Y	Y	Y	Y	Y	Y	N	§5.B.5.d. Broadcast and/or Recording Studio
Building & Home Repair Services	N	N	SP	SP	SP	SP	SP	N	SP	N	§5.B.5.e. Building & Home Repair Services

TABLE 5.1 Principal Uses

Y - by Right
L - by Right with Limitations
SP - by Special Permit
N - NOT Permitted

	Neighborhood Residence	Urban Residence	3-Story Mixed-Use	4-Story Mixed-Use	5-Story Mixed-Use	7-Story Mixed-Use	10-Story Mixed-Use	Fabrication	Commercial Industry	Civic	Use Specific Standards
COMMERCIAL SERVICES (CONT.)											
Business Support Services	N	N	Y	Y	Y	Y	Y	N	Y	N	§5.B.5.f. Business Support Services
Caterer/Wholesale Food Production	N	N	SP	SP	SP	SP	SP	Y	Y	N	§5.B.5.g. Caterer/Wholesale Food Production
Day Care Service (as noted below)	--	--	--	--	--	--	--	--	--	--	§5.B.5.h. Day Care Service
Adult Day Care Center	N	N	L	L	L	L	L	N	L	N	§5.B.5.h.i. Adult Day Care Center
Child Day Care Center	N	N	Y	Y	Y	Y	Y	Y	Y	N	§5.B.5.h.ii. Child Day Care Center
Maintenance & Repair of Consumer Goods	N	N	Y	Y	Y	Y	Y	N	Y	N	§5.B.5.i. Maintenance & Repair of Consumer Goods
Personal Services (except as noted below)	N	N	Y	Y	Y	Y	Y	Y	Y	N	§5.B.5.j. Personal Services
Body-Art Establishment	N	N	N	SP	SP	SP	SP	Y	N	N	§5.B.5.j.i. Body Art
Gym or Health Club	N	N	Y	Y	Y	Y	Y	N	N	N	§5.B.5.j.ii. Gym or Health Club
Funeral Home	N	N	SP	SP	SP	SP	SP	N	N	N	§5.B.5.j.iii. Funeral Home
Health Care Provider	N	N	SP	SP	SP	SP	SP	N	N	N	§5.B.5.j.iv. Health Care Provider
Recreation Facility	N	N	SP	SP	SP	SP	SP	SP	Y	Y	§5.B.5.k. Recreation Facility
EATING AND DRINKING											
Bar or Tavern	N	N	SP	SP	SP	SP	SP	N	SP	N	§5.B.6.a. Bar or Tavern
Restaurant, Café, Bakery	N	N	Y	Y	Y	Y	Y	N	Y	N	§5.B.6.b. Restaurant/Cafe/Bakery
Formula Eating & Drinking Establishment	N	N	SP	SP	SP	SP	SP	N	SP	N	§5.B.6.c. Formula Eating and/or Drinking Establishment
INDUSTRIAL											
Commercial Dry Cleaning & Laundry Services	N	N	N	N	N	N	N	N	Y	N	§5.B.7.a. Commercial Dry Cleaning & Laundry Services
Data Center	N	N	N	N	N	N	N	N	SP	N	§5.B.7.b. Data Center
Industrial Manufacturing	N	N	N	N	N	N	N	L	Y	N	§5.B.7.c. Industrial Manufacturing
Moving and/or Self Storage (except as noted below)	N	N	N	N	N	N	N	N	Y	N	§5.B.7.d. Moving & Self Storage
Self Storage	N	N	N	N	N	N	N	N	SP	N	§5.B.7.d.i. Self Storage
Recycling Collection	N	N	N	N	N	N	N	N	SP	N	§5.B.7.e. Recycling Collection
Salvage Yard	N	N	N	N	N	N	N	N	N	N	§5.B.7.f. Salvage Yard
Trucking and Transportation Depot	N	N	N	N	N	N	N	N	SP	N	§5.B.7.g. Trucking & Transportation Depot
Wholesale Trade & Distribution	N	N	N	N	N	N	N	L	L	N	§5.B.7.h. Wholesale Trade & Distribution
LODGING											
Bed & Breakfast	SP	SP	SP	SP	SP	SP	SP	N	N	N	§5.B.8.a. Bed & Breakfast
Hotel or Hostel	N	N	Y	Y	Y	Y	Y	N	SP	N	§5.B.8.b. Hotel or Hostel
Short Term Rental of a Dwelling Unit	L	N	N	N	N	N	N	N	N	N	§5.B.8.c. Short Term Rental of a Dwelling Unit
OFFICE											
Co-Working	N	N	Y	Y	Y	Y	Y	Y	Y	N	§5.B.9.a. Co-Working
General Office	N	N	L	L	L	L	L	N	L	N	§5.B.9.b. General Office
Research and Development and/or Laboratory	N	N	L	L	L	L	L	N	L	N	§5.B.9.c. Research & Development and/or Laboratory
RESIDENTIAL											
Household Living	Y	Y	Y	Y	Y	Y	Y	N	N	N	§5.B.10.a. Household Living

TABLE 5.1 Principal Uses

Y - by Right
L - by Right with Limitations
SP - by Special Permit
N - NOT Permitted

	Neighborhood Residence	Urban Residence	3-Story Mixed-Use	4-Story Mixed-Use	5-Story Mixed-Use	7-Story Mixed-Use	10-Story Mixed-Use	Fabrication	Commercial Industry	Civic	Use Specific Standards
RESIDENTIAL (CONT.)											
Group Living (except as noted below)	SP	SP	SP	SP	SP	SP	SP	N	N	N	§5.B.10.b. Group Living
Community or Group Residence	Y	Y	Y	Y	Y	Y	Y	N	N	N	§5.B.10.b.i. Community or Group Residence
Dormitory, Fraternity or Sorority	N	N	SP	SP	SP	SP	SP	N	N	N	§5.B.10.b.ii. Dormitory, Fraternity, or Sorority
Homeless Shelter	N	N	SP	SP	SP	SP	SP	N	N	N	§5.B.10.b.iii. Homeless Shelter
Nursing Home/Assisted Living Facility	N	SP	SP	SP	SP	SP	SP	N	N	N	§5.B.10.b.iv. Nursing Home/Assisted Living
Single Room Occupancy Housing	N	SP	SP	SP	SP	SP	SP	N	N	N	§5.B.10.b.v. Single Room Occupancy Housing (SRO)
RETAIL SALES											
Building/Home Supplies & Equipment	N	N	SP	SP	SP	SP	SP	N	Y	N	§5.B.11.a. Building/Home Supplies & Equipment
Consumer Goods (except as noted below)	L	L	L	L	L	L	L	N	L	N	§5.B.11.b. Consumer Goods
Drug Paraphernalia Store	N	N	N	N	N	N	N	N	N	N	§5.B.11.b.ii. Drug Paraphernalia Store
Firearms	N	N	N	N	N	N	N	N	N	N	§5.B.11.b.iii. Firearms
Packaged Liquor	N	N	SP	SP	SP	SP	SP	N	N	N	§5.B.11.b.iv. Packaged Liquor
Medical Marijuana	N	N	SP	SP	SP	SP	SP	N	N	N	§5.B.11.b.v. Medical Marijuana Facility
Pet Store	N	N	SP	SP	SP	SP	SP	N	SP	N	§5.B.11.b.vi. Pet Store
Formula Retail	N	N	SP	SP	SP	SP	SP	N	SP	N	§5.B.11.c. Formula Retail
Fresh Food Market or Grocery Store	L	L	Y	Y	Y	Y	Y	N	SP	N	§5.B.11.d. Fresh Food Market or Grocery Store
Farm/Vendor Market	N	N	Y	Y	Y	Y	Y	N	Y	N	§5.B.11.e. Farmer/Vendor Market
URBAN AGRICULTURE											
Farming (as noted below)	--	--	--	--	--	--	--	--	--	--	§5.B.12.a. Farming
Commercial Farm	N	N	Y	Y	Y	Y	Y	N	N	N	§5.B.12.a.i. Commercial Farming
Community Farm	Y	Y	Y	Y	Y	Y	Y	Y	Y	N	§5.B.12.a.ii. Community Farming
Community Gardening	Y	Y	Y	Y	Y	Y	Y	Y	Y	N	§5.B.12.b. Community Gardening

TABLE 5.2 Accessory Uses

Y - By-Right
SP - Special Permit
N - NOT Permitted

	Neighborhood Residence	Urban Residence	3-Story Mixed-Use	4-Story Mixed-Use	5-Story Mixed-Use	7-Story Mixed-Use	10-Story Mixed-Use	Fabrication	Commercial Industry	Civic	Use Specific Standards
HOME OCCUPATIONS											
Creative Studio	Y	Y	N	N	N	N	N	N	N	N	§5.C.2.b.i. Creative Studio
Family Day Care	L	L	L	L	L	L	L	N	N	N	§5.C.2.b.ii. Family Day Care
Hobby Kennel	SP	N	N	N	N	N	N	N	N	N	§5.C.2.b.iii. Hobby Kennel
Home-Based Business	L	L	N	N	N	N	N	N	N	N	§5.C.2.b.iv. Home-Based Business
Home Office	L	L	L	L	L	L	L	N	N	N	§5.C.2.b.v. Home Office
ACCESSORY LODGING											
Tourist Home	Y	Y	Y	Y	Y	Y	Y	N	N	N	§5.C.3.a. Tourist Home
URBAN AGRICULTURE											
Apiculture	L	L	L	L	L	L	L	N	N	N	§5.C.4.a. Apiculture
Aviculture	L	L	L	L	L	L	L	N	N	N	§5.C.4.b. Aviculture
Commercial Farming	L	L	L	L	L	L	L	N	N	N	§5.C.4.c. Commercial Farming
Residential Gardening	L	L	L	L	L	L	L	N	N	N	§5.C.4.d. Residential Gardening
VEHICULAR PARKING											
Accessory Parking	Y	Y	Y	Y	Y	Y	Y	Y	Y	Y	§5.C.5.a. Accessory Parking
Bike-Share	SP	SP	L	L	L	L	L	L	L	L	§5.C.5.b. Bike-Share
Car Share Parking (as noted below)	--	--	--	--	--	--	--	--	--	--	§5.C.5.c. Car-Share Parking
Up to three (3) spaces	N	SP	Y	Y	Y	Y	Y	Y	Y	Y	n/a
Four (4) or more spaces	N	SP	SP	SP	SP	SP	SP	SP	SP	SP	n/a
Business Vehicle Parking	L	L	SP	SP	SP	SP	SP	N	N	N	§5.C.5.d. Business Vehicle Parking
ACCESSORY RESIDENTIAL											
Secondary Dwelling Unit	SP	SP	N	N	N	N	N	N	N	N	§5.C.6.a. Secondary Dwelling Unit

ARTICLE 6: DEVELOPMENT STANDARDS

GENERAL 183
Applicability 183

ACCESSORY STRUCTURES 184
General 184
Accessory Structures 184

WIRELESS COMMUNICATION STRUCTURES ... 187
Purpose 187
Applicability 187
Development review 187
Wireless Communication Towers 187
Wireless communication antennas 187
Ancillary structures 187
Design Guidelines 188
Abandonment 188

LANDSCAPING & TREE PRESERVATION 189
Purpose 189
Landscape Design 189
Landscape Installation 189
Landscape Maintenance 189
Tree Preservation 190
Landscape Buffers 190
Street Trees 190

FENCES & WALLS 191
Fences 191
Retaining Walls 191

SCREENING 192
Loading Facilities 192
Service Areas 192
Mechanical Equipment 192

SIGNS 193
Purpose 193
Applicability 193
Development Review 193
Address Signs 194
Exempt Signs 194
Prohibited Signs 194
Temporary Signs 194
Sign Maintenance 194
Removal 194
Sign Illumination 195
Blade Sign 196
Wall Sign 197
Awning / Canopy Sign 198
Suspended Sign 199
Sidewalk Sign 200
Window Sign 201
Display Case 202
Yard Sign 203
Freestanding Sign 204
Vertical Blade / Banner Sign 205
Wall Mural 206
Roof / Skyline Sign 207

OUTDOOR LIGHTING 208
Purpose 208
Applicability 208
Prohibited Lighting 208
General Standards 208
Design Standards 208
Specific Lighting standards 208

OUTDOOR CAFE SEATING 210
General 210
Applicability 210
Cafe AREA DIMENSIONS 210
Furniture 210
Weather PROTECTION 210
Enclosures 210

A. GENERAL

1. APPLICABILITY

a. This Article contains general development standards that are not unique to any standard or special districts and applicable to all real property as indicated on Table 6.1.

i. Sections identified with a "F" are applicable to the full site or property.

ii. Sections identified with a "P" are applicable only to the portion of the site or property affected by the new construction, change in use, expansion of floor space, expansion of parking, sign installation, or facade improvement.

TABLE 6.1 General Development Standards

F - Full
P - Proportional
N/A - Not Applicable

	New Construction	Change in Use	Expansion of Floor Space	Expansion of Parking	Sign Installation	Facade Improvement	Site Improvements	Cross Reference
Accessory Structures	F	n/a	n/a	n/a	n/a	n/a	P	§6.B. Accessory Structures
Wireless Communications Structures	F	n/a	n/a	n/a	n/a	n/a	P	§6.C. Wireless Communication Structures
Landscaping & Tree Preservation	F	n/a	F	F	n/a	n/a	F	§6.D. Landscaping & Tree Preservation
Fences & Walls	F	n/a	P	P	n/a	n/a	P	§6.E. Fences & Walls
Screening	F	n/a	P	n/a	P	P	P	§6.F. Screening
Signs	F	P	P	n/a	P	P	n/a	§6.G. Signs
Outdoor Lighting	F	P	P	F	P	P	P	§6.H. Outdoor Lighting
Outdoor Cafe Seating	F	F	P	n/a	n/a	P	P	§6.I. Outdoor Cafe Seating

B. ACCESSORY STRUCTURES

1. GENERAL

a. Unless otherwise expressly stated in this Ordinance, accessory structures are permitted in conjunction with permitted principal building types according to Table 6.2.

b. Accessory structures may not be constructed prior to the following:
   i. construction of a principal building type; or
   ii. issuance of a special permit for an accessory use, as applicable.

c. The Building Official shall determine when a structure is accessory to the principal building of a lot. To determine that a structure is accessory, the Building Official must find that the structure:
   i. is customarily found in association with a permitted accessory use;
   ii. is clearly incidental and subordinate to the principal building in terms of area, size, function, and location;
   iii. is operated and maintained under the same ownership and on the same site as the principal building; and
   iv. not attached to a principal structure.

d. Unless otherwise specified, accessory structures are permitted to encroach any side or rear setback, provided that at least two (3) feet is maintained from the vertical plane of any lot line.

e. Accessory structures are not permitted to encroach any front lot line.

2. ACCESSORY STRUCTURES

a. Amateur Radio Equipment
Antennas located on ground-mounted towers and

TABLE 6.2 Permitted Accessory Structures

Y - by Right
L - by Right with Limitations
SP - by Special Permit
N - NOT Permitted

	Neighborhood Residence	Urban Residence	3-Story Mixed-Use	4-Story Mixed-Use	5-Story Mixed-Use	7-Story Mixed-Use	10-Story Mixed-Use	Fabrication	Commercial Industry	Civic	Use Specific Standards
Amateur Radio Equipment	L	L	L	L	L	L	L	L	L	L	§6.B.2.a. Amateur Radio Equipment
Apiary	L	L	L	L	L	L	L	L	L	L	§6.B.2.b. Apiary
Arbor	L	L	L	L	L	L	L	L	L	L	§6.B.2.c. Arbor
Carport	L	L	L	L	L	L	L	L	L	L	§6.B.2.d. Carport
Chicken Coop (Hen House)	L	L	L	L	L	L	L	L	L	L	§6.B.2.e. Chicken Coop (Hen House)
Cold Frame	L	L	L	L	L	L	L	L	L	L	§6.B.2.f. Cold Frame
Compost Bin	Y	Y	Y	Y	Y	Y	Y	Y	Y	Y	§6.B.2.g. Compost Bin
Construction Trailer or Office	L	L	L	L	L	L	L	L	L	L	§6.B.2.h. Construction Trailer or Office
Donation Box	L	L	L	L	L	L	L	L	L	L	§6.B.2.i. Donation Box
Farm Stand	L	L	L	L	L	L	L	L	L	L	§6.B.2.j. Farm Stand
Garage (Private)	L	L	L	L	L	L	L	L	L	L	§6.B.2.k. Garage (Private)
Gazebo	Y	Y	Y	Y	Y	Y	Y	Y	Y	Y	§6.B.2.l. Gazebo
Greenhouse	Y	Y	Y	Y	Y	Y	Y	Y	Y	Y	§6.B.2.m. Greenhouse
Hoop House	L	L	L	L	L	L	L	L	L	L	§6.B.2.n. Hoop House
Market Stand	Y	Y	Y	Y	Y	Y	Y	Y	Y	Y	§6.B.2.o. Market Stand
Pergola	Y	Y	Y	Y	Y	Y	Y	Y	Y	Y	§6.B.2.p. Pergola
Pool or Hot Tub	L	L	L	L	L	L	L	N	N	L	§6.B.2.q. Pool or Hot Tub
Real Estate Sales Trailer or Office	L	L	L	L	L	L	L	L	L	L	§6.B.2.r. Real Estate Trailer or Office
Satellite Dish	L	L	L	L	L	L	L	L	L	L	§6.B.2.s. Satellite Dish
Shed	Y	Y	Y	Y	Y	Y	Y	Y	Y	Y	§6.B.2.t. Shed
Solar Collector	Y	Y	Y	Y	Y	Y	Y	Y	Y	Y	§6.B.2.u. Solar Collector
Temporary Shelter	L	L	L	L	L	L	L	L	L	L	§6.B.2.v. Temporary Shelter
Trellis	L	L	L	L	L	L	L	L	L	L	§6.B.2.w. Trellis
Workshop or Playhouse	L	L	L	L	L	L	L	L	L	L	§6.B.2.x. Workshop or Playhouse

roof-mounted support structures used to broadcast an amateur (ham) radio station licensed by the Federal Communications Commission (FCC). The following standards apply:

i. Ground-mounted towers are permitted only in the rear yard and must be located a minimum of ten feet from any lot line and any overhead electric distribution or transmission lines. The tower must be fully enclosed by a fence or wall of at least four feet in height.
ii. Ground-mounted towers may not exceed thirty-five (35) feet, measured from the base of the supporting tower to its tallest point.
iii. A roof-mounted antenna, when fully extended, is limited to a maximum height of ten feet above the height of the structure to which it is mounted.
iv. No more than one antenna, whether ground-mounted or roof-mounted, is permitted per lot.

b. Apiary
A structure for the keeping of honeybees. The following standards apply:
i. Apiaries and other beekeeping supplies are not permitted within twenty (20) feet of a front lot line.

c. Arbor
A structure with an open frame, freestanding or attached to another structure, with horizontal or vertical latticework often used as a support for ornamental vines and/or climbing plants. The following standards apply:
i. Arbor are not permitted to exceed eight (8) feet in height.

d. Carport
A covered structure that provides protection to motor vehicles from the elements. The following standards apply:
i. A carport must be set back at least 20 feet from any front lot line.
ii. Where an improved alley is available, carport access must take place from the alley.
iii. A carport is limited to fifteen (15) feet in height and a width and depth of no more than 24 feet.
iv. A carport must be setback a minimum of three (3) feet from any side or rear lot line unless constructed of fireproof materials.

e. Chicken Coop (Hen House)
A structure for the keeping of chickens, with nest boxes for egg-laying and perches where the birds can sleep. The following standards apply:
i. Chicken coops are not permitted within 20 feet of a front lot line.

f. Cold Frame
An unheated outdoor structure built close to the ground, typically consisting of, but not limited to, a wooden or concrete frame and a top of grass or clear plastic used for protecting seedlings and plants from cold weather. The following standards apply:
i. A cold frame is limited to six and one-half (6.5) feet in height.
ii. Any plastic covering of a cold frame must be removed and stored when plant cultivation is not in process.

g. Compost Bin
An outdoor container in which garden refuse and other organic waste is deposited in order to produce compost. The following standards apply:
i. Compost bins must have a ground gate and pest proof lids.

h. Construction Trailer or Office
A temporary structure providing office space for project management at a construction site. The following standards apply:
i. Construction trailers and/or offices must comply with the setbacks applicable to principal buildings for the appropriate district.

i. Donation Box
A container, usually made of metal, with a one-way drop to allow donation of household items. The following standards apply:
i. Containers must be watertight and secured to the ground.

j. Farm Stand
A temporary structure for the display and sale of clean, whole, unprocessed produce, eggs, or honey cultivated on site. The following standards apply:
i. One (1) farm stand is permitted per lot.
ii. Product display & area for retail sales is not permitted to exceed fifty (50) square feet.
iii. The farm stand, associated product display, and signage must be stored out of sight when not in use.

k. Garage (Private)
A fully-enclosed structure, whether attached to or detached from a principal building, used for the storage of up to two (2) motor vehicles. The following standards apply:
i. One (1) garage is permitted per lot.
ii. A garage, whether attached or detached, must be set back at least twenty (20) feet from any front lot line.
iii. Where an improved alley is provided, garage access must take place from the alley.
iv. A garage is limited to fifteen (15) feet in height and a width and depth of no more than 24 feet.
v. A garage must be setback a minimum of three (3) feet from any side or rear lot line unless constructed of fireproof materials.

l. Gazebo
A detached structure covered by a roof, occasionally enclosed with screening, and intended for outdoor recreational use.

m. Greenhouse
A structure, primarily of transparent material, in which temperature and humidity can be controlled for the cultivation or protection of plants or other horticultural products.

n. Hoop House
A temporary structure typically made of, but not limited to, piping or other material covered with a translucent material for the purpose of growing food or ornamental crops. The following standards apply:
i. A hoop house is limited to six and one-half (6.5) feet in height.
ii. The covering of a hoop house must be removed and stored when plant cultivation is not in process.

o. Market Stand

A partially-enclosed structure used for outdoor retail sales.

p. Pergola
A structure consisting of parallel colonnades supporting an open roof or girders and cross rafters, often shading an outdoor amenity area.

q. Pool or Hot Tub
A structure filled with water used for recreation or physical therapy. The following standards apply:
   i. Pools and hot tubs must be setback at least five (5) feet from a side or rear lot line, ten (10) feet from a front lot line, and ten (10) feet from any principal structure in residential use.
   ii. Uncontrolled access to pools or hot tubs must be prevented using a wall, fence, or other acceptable means.

r. Real Estate Trailer or Office
A temporary structure providing office space for the sale or rental of real estate at a construction site. The following standards apply:
   i. Real Estate trailers and/or offices must comply with the setbacks applicable to principal buildings for the appropriate district.

s. Satellite Dish
A dish antenna for transmitting signals to a receiver or receiving station or for receiving television, radio, data, communication, or other signals from other antennas, satellites, or services. Small satellite dish antennas are one meter or less in diameter and large satellite dish antennas exceed one meter in diameter. The following standards apply:
   i. Satellite dish antennas must be permanently installed as building-mounted or ground-mounted structures and must not be portable or movable.
   ii. Building-mounted satellite dishes may not be installed on any facade unless such placement is required for reception of an acceptable signal, according to a written statement from a licensed, authorized installer on company letterhead that includes the installer's signature.
   iii. Large satellite dish antennas are permitted only in rear yards, and must be set back from all lot lines a distance that is at least equal to the height of the dish, or five feet, whichever is less. Roof-mounted large satellite dish antennas must be located a minimum of five feet from any roof edge.

t. Shed
A roofed structure used as a storage space. The following standards apply:
   i. Sheds larger and one hundred and twenty (120) square feet and fifteen (15) feet in height are prohibited.

u. Solar Collector
Any of a variety of structures designed to absorb solar radiation for the purpose of heating water or buildings or the producing electricity.

v. Temporary Shelter
A trailer or mobile structure used as the residence of a dwelling unit. The following standards apply:
   i. Use is restricted to up to twelve (12) consecutive months during the rebuild of a principal building after a fire or catastrophe.

w. Trellis
A framework of latticework that is at least 50% open, typically made of bars of wood or metal crossed over each other, and chiefly used as a support for vines, fruit trees, or climbing plants. The following standards apply:
   i. A trellis is limited to a maximum height of eight (8) feet.

x. Workshop or Playhouse
A fully enclosed structure, whether attached or detached from a principal building, used for a home occupation or as a playroom for children. The following standards apply:
   i. One (1) workshop or playhouse is permitted per lot.
   ii. A workshop or playhouse, whether attached or detached, must be set back at least 20 feet from any front lot line.
   iii. A workshop or playhouse is limited to fifteen (15) feet in height and a width and depth of no more than 24 feet.
   iv. A workshop or playhouse must be setback a minimum of three (3) feet from any side or rear lot line unless constructed of fireproof materials.
   v. Use of a workshop or playhouse for sleeping purposes is prohibited.

C. WIRELESS COMMUNICATION STRUCTURES

1. PURPOSE

a. To facilitate effective and efficient telecommunication services throughout the city.
b. To encourage the co-location and joint use of new and existing wireless communication towers and wireless communication antenna locations.
c. To minimize the total number of towers throughout the community.
d. To encourage the mounting of antennas to existing structures.
e. To ensure towers and antennas are configured in a way that minimizes adverse visual impacts and reduces the impact of telecommunications structures on public health and safety.
f. To avoid potential damage to adjacent properties from tower and antenna failure.

2. APPLICABILITY

a. This section regulates all wireless communication towers, wireless communication antennas, and ancillary structures consistent with Sections 253 and 332(c)(7) of the Communications Act of 1934, as amended, and section 6409(a) of the Middle Class Tax Relief and Job Creation Act of 2012.

3. DEVELOPMENT REVIEW

a. The expansion of eligible facilities below the thresholds of Section 6409(a) of the Middle Class Tax Relief Act of 2012 requires the following:
   i. A pre-submittal meeting according to the provisions of §10.B.1. Pre-Submittal Meeting.
   ii. A zoning permit according to the provisions of §10.C.1. Zoning Permit.
b. The development, modification, or renovation of a wireless communication tower, wireless communication antenna, or ancillary structure requires a special permit according to the provisions of §10.D.1. Special Permit.
c. The Zoning Board of Appeals is the review board for all Special Permit applications required for wireless communication towers, wireless communication antennas, and their ancillary structures.
d. Applicants must submit a rendering or computer-simulated photograph illustrating the view of any proposed wireless communications tower or antenna from at least three (3) prominent locations along the surrounding public thoroughfares.
e. In its discretion to approve or deny a Special Permit authorizing a wireless communication tower, wireless communication antenna, and any ancillary structure, the review board shall consider the following:
   i. Suitability of nearby, existing sites and/or the feasibility of alternative technologies.
   ii. Height and design of proposed tower or antenna, with particular concern for design solutions that reduce or eliminate visual impact.
   iii. Compatibility with the uses associated with surrounding properties and proximity of the proposed tower or antenna to properties in residential use.
   iv. Topography, on-site vegetation, and the prominence of proposed facility.
   v. Proposed ingress and egress for maintenance.

4. WIRELESS COMMUNICATION TOWERS

a. Wireless communication towers approved according to the provisions of this section may be built prior to or independent of any principal building type on a lot.
b. Development Standards
   i. Wireless communication towers are not permitted to exceed the tallest building type permitted for the district where they are located.
   ii. Lighting is prohibited, except as required by the Federal Aviation Administration.
   iii. Signs are prohibited, except as follows:
      a). signs required by the FAA, FCC, or other applicable authority;
      b). no trespassing signs or other notifications that alert the public to potential safety concerns; or
      c). a nameplate or sign identifying the name and phone number of the owner or operator.
   iv. Wireless communication towers must be setback from any property line a distance equal to their height.

5. WIRELESS COMMUNICATION ANTENNAS

a. Development Standards
   i. Roof mounted antennas:
      a). are not permitted to exceed ten (10) feet in height;
      b). must be setback at least ten (10) feet from the edge of the roof; and
      c). are not permitted to project above a plane inclined at a forty-five degree (45°) angle from vertical, beginning at edge of the roof.
   ii. Wall or tower mounted antennas:
      a). must be flush-mounted below any roof line of the structure they are attached to,
      b). must be at least forty (40) feet above the average grade of the lot, measured from the ground to the base of the antenna; and
      c). must be painted or otherwise screened in a way to match the colors or simulate the materials of the building or tower on which they are mounted.
   iii. Lighting is prohibited, except as required by the Federal Aviation Administration.
   iv. Signs are prohibited, except as follows:
      a). signs required by the FAA, FCC, or other applicable authority;
      b). no trespassing signs or other notifications that alert the public to potential safety concerns; or
      c). a nameplate or sign identifying the name and phone number of the owner or operator.

6. ANCILLARY STRUCTURES

a. Structures serving or being used in conjunction with a wireless communication tower or antenna are considered ancillary. Examples include utility or transmission equipment storage sheds or cabinets.
b. An ancillary structure for wireless communications does not require separate development review when installed in conjunction with an approved wireless communication

tower or antenna.

c. Any buildings, cabinets, or shelters may house only equipment and supplies for operation of the wireless communication tower or antenna.
d. Any equipment not used in direct support of such operation must not be stored on the site.
e. The structure must be un-staffed.
f. Signs are prohibited, except as follows:
   i. signs required by the FAA, FCC, or other applicable authority;
   ii. no trespassing signs or other notifications that alert the public to potential safety concerns; or
   iii. a nameplate or sign identifying the name and phone number of the owner or operator.

7. DESIGN GUIDELINES

a. Towers should only be used in circumstances where no alternative building-mounted options are available.
b. Towers facilities should be designed to structurally accommodate the maximum number of foreseeable users.
c. Towers and antennas should be located as follows:
   i. on properties owned or managed by the City of Somerville or the Somerville Housing Authority;
   ii. on properties located in the fabrication, commercial industry, or any mixed-use district;
d. When antennas for multiple service providers are located on a single site, the antennas should be co-located to reduce visual impact.
e. Antennas should be interior-mounted so that they are concealed from public view (e.g., inside church steeples, cupolas, bell-towers, or penthouses), or side-mounting onto existing structures in the least obtrusive location feasible, preferably with limited visibility from abutting streets.
f. Where existing antennas have been installed in stealth enclosures, new equipment should be installed in stealth enclosures designed to match those already on the site.
g. Locations should be chosen with a sensitivity to the surrounding topography and predominant view corridors.
h. Antenna technology should be chosen to minimize the visual effect of "massing" panels on a rooftop.
i. To every extent possible, new co-located equipment should meet the same conditions applied to any original special permit authorizing the wireless communication tower or antenna on the site.
j. Existing on-site vegetation should be preserved to the maximum extent practical.
k. All network interconnections from the communications site should be via underground lines.

8. ABANDONMENT

a. If the owner of any wireless communications tower or antenna communicates an intent to discontinue use or if any tower or antenna is not operated for a continuous period of twelve (12) months, the tower or antenna, and any ancillary structures and equipment must be removed by the owner of the tower or antenna within ninety (90) days.

D. LANDSCAPING & TREE PRESERVATION

1. PURPOSE

a. To protect and expand the city's mature tree canopy.
b. To enhance the visual character of the city and its neighborhoods.
c. To improve air quality, mitigate vehicular air pollutant emissions, and reduce greenhouse gases in the atmosphere.
d. To reduce heat island impacts of excessively paved sites, promote temperature regulation of local micro-climate, and provide seasonal shade to reduce energy used in buildings.
e. To restore the environmental quality of soils and land disrupted as a result of construction or site grading.
f. To improve site permeability and reduce storm water runoff, erosion of the landscape, and sedimentation of municipal infrastructure and regional waterways.
g. To reduce ambient noise levels and diminish the potential noise impacts between adjacent zoning districts.

2. LANDSCAPE DESIGN

a. Landscape should consist primarily of native species requiring minimal irrigation, fertilization, and maintenance. Plantings must be cold hardy, drought tolerant, and able to survive on natural rainfall once established with no loss of health.
b. Planting areas must have uncompacted coarse loam that is a minimum of 12 inches deep. Soils must be appreciably free of gravel, stones, rubble, or trash. All compacted soil, contaminated soil, or road base fill must be removed.
c. The spacing and placement of plants must be adequate and appropriate for the typical size, shape, and habit of the plant species at maturity.
d. A minimum of two (2) kinds of landscape cover is required, including but not limited to trees, shrubs, permeable and pervious pavers, and turf grass.
e. A minimum of one (1) LARGE TREE is required for each one thousand (1,000) square feet of landscaped lot area for lots in the Neighborhood Residence (NR) and Urban Residence (UR) districts.
f. Proposed trees must be a minimum height of ten (10) feet or three (3) inches in caliper.
g. Bare and exposed ground on a site and/or in required landscaped areas must be stabilized and maintained with turf grass, ground cover, or mulch to prevent soil erosion and allow water infiltration, with the exception of the following:
    i. Land area dedicated to urban agricultural activities, as permitted;
    ii. Trails;
    iii. Naturally occurring stream beds, rock outcroppings, and similar features typically lacking in vegetation; and
    iv. Clay or sand surfaces associated with recreation fields and facilities.
h. Constructed water features such as fountains and ponds that operate with water recirculation systems must be designed to prevent seepage and leaks.
i. Restrictions
    i. Ground vegetation or shrub plantings with spines, thorns, or needles that may present hazards to pedestrians or cyclists are prohibited from within two (2) feet of any front lot line.
    ii. Nothing but ground cover less than six (6) inches in height may be planted or installed within any underground or overhead utility or drainage easement without consent of the utility provider or easement holder and the City of Somerville.
    iii. Nothing but ground cover less than six (6) inches in height may be planted or installed within three (3) feet of any fire protection system.
    iv. Artificial plants and artificial turf are prohibited, excluding active recreation sports fields that are subject to intense use and soil compaction that prohibits the establishment of turf grass, and where paving or grass paving systems will not suffice given the area's purpose and level of use.

3. LANDSCAPE INSTALLATION

a. All landscape plantings required by this Ordinance must be installed prior to the issuance of a certificate of occupancy by the Building Official. However, when required landscape cannot be installed because of the season of the year, or because of abnormally inclement weather conditions, the Building Official may grant a temporary Certificate of Occupancy, but shall not issue a permanent Certificate of Occupancy, as follows:
    i. until the provision and completion of all required landscape work has been completed; or
    ii. upon the applicant providing a bond equal in value the remaining work to be completed.
b. Plant materials must be installed in accordance with the latest addition of the American Standard for Nursery Stock published by the American Nursery and Landscape Association (ANLA).
c. Plant materials must be installed in soil of sufficient volume, composition, and nutrient balance to sustain health growth to full maturity.
d. Landscape areas within six (6) feet of a paved vehicular parking area or roadway of a thoroughfare must be raised or protected by curbing or edging six (6) inches or higher above the finished pavement to protect plantings from traffic, de-icing salts, and snow plowing operations common to the winter season.

4. LANDSCAPE MAINTENANCE

a. It is the responsibility of the property owner(s) or their designated agent(s) to:
    i. Maintain all landscaping by keeping turf grass lawns mowed and edged; plants properly pruned and disease-free; and planting beds mulched, groomed, and weeded.
    ii. Trim all hedges, bushes, trees, or other plantings or vegetation to prevent encroachment by growth onto the sidewalk of any public thoroughfare that obstructs use of the sidewalk by pedestrians in any way.
    iii. Replace any required planting(s) that are significantly damaged, missing, infested, disease-ridden, or dead within one year or by the next planting season,

whichever occurs first.

5. TREE PRESERVATION

a. Preservation of existing, on-site trees and other vegetation is the preferred means for landscaping. Mature, healthy trees and vegetation may be used to fulfill landscape requirements of this Section according to the following:
   i. Existing trees may be counted as required trees provided that:
      a). The tree is at least four (4) inches in diameter at breast height; and
      b). The tree is determined to be in good health and not damaged, diseased, or a threat to public health or safety.
   ii. Invasive plant species to the State of Massachusetts must be removed from the site.

b. Preservation of existing trees located within a front, side, or rear setback area of a lot is required as a condition of any demolition permit or special permit to alter a nonconforming structure provided that:
   i. The tree is at least four (4) inches in diameter at breast height; and
   ii. The tree is determined to be in good health and not damaged, diseased, or a threat to public health or safety.

c. In cases of accidental damage during construction activities to any tree designated for preservation, the damaged tree must be replaced with trees equal to two (2) times the diameter of the tree lost in total caliper.

d. The root area of earth under the dripline of the canopy of any preserved tree must remain uncleared and undisturbed and the tree must be protected from damage that would undermine its long term health and quality throughout the course of demolition or construction.
   i. A temporary construction fence must be installed and maintained to protect the root area of earth under the dripline of the tree's canopy.
   ii. Storage of construction materials is prohibited on the root area of earth under the dripline of the tree's canopy.

6. LANDSCAPE BUFFERS

a. Lots within any zoning district other than the NR district that abut the side or rear lot line of a lot in the NR district must be screened by a landscape buffer for 100% of the length of the shared lot line to increase privacy and minimize the trespass of undue sound and light between adjacent properties.

b. A landscape buffer must be a minimum of four (4) feet in depth from the shared lot line, planted with a minimum of three (3) large trees with full canopy density for every one hundred (100) feet of lot line, and include a wall or fully closed fence.

c. Fences and walls are subject to the provisions of §6.E. Fences & Walls.

d. Preexisting, substantially equivalent vegetation that is preserved within the landscape buffer may substitute for any required landscape buffer plantings provided that the preexisting vegetation is healthy and growing.

e. Water, sanitary sewer, electrical, telephone, natural gas, cable, storm drainage, or other service lines are permitted within landscape buffers.

f. Accessory parking for motor vehicles is prohibited within a required landscape buffer.

7. STREET TREES

a. A minimum of one street tree must be installed within the furnishing zone of the abutting public thoroughfare for every thirty (30) linear feet of lot frontage, or fraction thereof.

b. Street trees must be installed according to the provisions of §.8.D. Thoroughfares.

c. The Building Official may exempt applicants from the requirement of §6.D.5.a when:
   i. The minimum number of required street trees already exist in the furnishing zone of the abutting thoroughfare corresponding to the lots frontage.
   ii. One or more mature, healthy trees planted on-site in close proximity to the front lot line, with canopy reaching over the abutting thoroughfare, would cause overcrowding of the new street tree.
   iii. The specific location of an existing curb cut, utility line, transit stop, or other feature conflicts with the proper placement of a street tree.

d. The Building Official may require street tree installation in alternative locations within the City of Somerville when installation cannot be accommodated within the furnishing zone of the abutting public thoroughfare.

E. FENCES & WALLS

1. FENCES

a. Fences may be placed up to and along any lot line.
b. Fences installed directly onto a shared side or rear lot line require consent of the abutting property owner.
c. Fences do not require a Zoning Permit or Building Permit and are erected at the owners risk.
d. Fence posts or supporting rails must face inward toward the property being fenced and the finished face must be oriented towards the adjacent property.
e. Interior Lots
    i. Fences located forward of the maximum front setback or the actual distance a building facade is setback from the front lot line (which ever is less) shall be no more than four (4) feet in height and no more than fifty percent (50%) opaque.
    ii. Fences located behind the maximum front setback or the actual distance a building facade is setback from the front lot line (which ever is less) greater than six (6) feet in height are prohibited, unless required a screening (see §6.F. Screening).
f. Corner Lots
    i. Fences located forward of the maximum front setback or the actual distance a building facade is setback from the front lot line (which ever is less), for both the primary and secondary frontage, shall be no more than four (4) feet in height and no more than fifty percent (50%) opaque.
    ii. Fences located behind the maximum front setback or the actual distance a building facade is setback from the front lot line (which ever is less) shall be no more than six (6) feet in height.
g. Architectural Fence Features
    i. Fence and gate posts that are integrated as architectural features in the design of a fence are permitted up to six and one half (6.5) feet in height for side and rear fences and up to four and one half (4.5) feet for front fences.
h. Restrictions
    i. Fences are prohibited within any existing or required drainage or utility easement.
    ii. Fences within four (4) feet of windows shall be no less than seventy percent (70%) opaque.
    iii. Barbed wire and concertina wire are prohibited.

2. RETAINING WALLS

a. Any portion of a retaining wall that exists above the ground level of the higher grade shall comply with the requirements for fences (see §6.E.1. Fences above).
b. When provided, retaining walls located forward of the maximum front setback shall be no more than four (4) feet in height and successive walls shall be built with a minimum horizontal separation distance of four (4) feet. Retaining walls may be built to any height elsewhere on a lot.

F. SCREENING

1. LOADING FACILITIES

a. Outdoor loading facilities, including all docks and areas used for the storage and staging of materials must be screened from view by a wall or fully closed fence between six (6) and twelve (12) feet in height, as necessary to sufficiently screen delivery vehicles, and finished to match the materials and design of the nearest wall of the principal building.

b. Loading areas facilities that are fully integrated into a building must be screened with a solid opaque, self closing door or gate finished to coordinate with the materials and design of the screening wall or fence.

c. Bay Loading facility doors are only permitted to be opened ~~only~~ during loading and unloading activities.

2. SERVICE AREAS

a. Trash collection, trash compaction, recycling collection and other similar service areas must be fully enclosed by a wall or fully closed fence at least six (6) feet in height with self-closing access doors and finished to match the materials and design of the principal building.

b. Service areas that are fully integrated into a building must be screened with an opaque, self closing door or gate finished to coordinate with the materials and design of the screening wall or fence.

3. MECHANICAL EQUIPMENT

a. Roof-Mounted

i. Mechanical equipment and elevator/stairwell penthouses must be screened from ground level view from abutting properties, public thoroughfares (not including an alley), and civic spaces by a parapet wall or other screening structure constructed of the same materials as the principal building.

ii. Roof-mounted sustainable energy systems are exempt.

b. Wall-Mounted

i. Mechanical equipment shall not be located on any facade.

ii. Mechanical equipment on any surface that is visible from a public thoroughfare (excluding an alley) or civic space shall be screened by landscaping or an opaque screen constructed of the same materials as the principal building.

c. Ground-Mounted

i. Mechanical equipment that is visible from a public thoroughfare (excluding an alley) or civic space shall be screened by landscaping or a wall constructed of the same materials as the principal building.

ii. Screening must be of a height equal to or greater than the height of the mechanical equipment being screened.

G. SIGNS

1. PURPOSE

a. To provide property owners and tenants reasonable and effective means for identifying street address, business name, goods sold or produced, and services provided to the public.
b. To regulate the size, location, and physical design of temporary and permanent signs.
c. To preserve the cultural significance of architectural resources for the enjoyment and enrichment of the community.
d. To protect against the adverse impacts of sign clutter and excessive and/or confusing signs.
e. To promote legibility of the urban environment.

2. APPLICABILITY

a. Nothing contained in this Section shall be construed as the content-based regulation of sign messages prohibited by the federal or state constitution, statues, or court decisions.
b. Nothing contained in this Section shall be construed to conflict with M.G.L. Chapter 85, Section 8 & 9 or M.G.L. Chapter 93, Sections 29 through 33, as amended.

3. DEVELOPMENT REVIEW

a. General
   i. Signs are permitted for non-residential uses according to Table 6.3.
   ii. See §6.G.11. Blade Sign through §6.G.24. Roof / Skyline Sign for the standards for each type.
   iii. Signs not expressly authorized are prohibited.
b. Administrative Review
   i. Signs permitted "by-right with limitations" require only a zoning permit. See §10.C.1. Zoning Permit for more information.
c. Discretionary Review
   i. Signs permitted "by Special Permit" require a special permit as a prerequisite to a the issuance of a zoning permit. See §10.D.1. Special Permit for more information.
      a). In its discretion to approve or deny a special permit to authorize a ground sign or roof / skyline sign, the review board shall consider the following:
         i). Design of the sign as an effective means of communication.
         ii). Compatibility with the visual character of the surrounding area.
         iii). Appropriate sizing for the location.
         iv). The potential for adverse effects on nearby properties and pedestrian and traffic safety.

TABLE 6.3 Permitted Signs

Y - by Right
L - by Right with Limitations
SP - by Special Permit
N - NOT Permitted

	Neighborhood Residence	Urban Residence	3-Story Mixed-Use	4-Story Mixed-Use	5-Story Mixed-Use	7-Story Mixed-Use	10-Story Mixed-Use	Fabrication	Commercial Industry	Civic	Type Specific Standards
Blade Sign	L	L	L	L	L	L	L	L	L	N	§6.B.2.11. Blade Sign
Wall Sign	L	L	L	L	L	L	L	L	L	N	§6.B.2.12. Wall Sign
Awning / Canopy Sign	L	L	L	L	L	L	L	L	L	N	§6.B.2.13. Awning / Canopy Sign
Suspended Sign	L	L	L	L	L	L	L	L	L	N	§6.B.2.14. Suspended Sign
Sidewalk Sign	L	L	L	L	L	L	L	L	L	N	§6.B.2.16. Sidewalk Sign
Window Sign	L	L	L	L	L	L	L	L	L	N	§6.B.2.17. Window Sign
Display Case	L	L	L	L	L	L	L	L	L	N	§6.B.2.19. Display Case
Yard Sign	L	L	N	N	N	N	N	N	N	N	§6.B.2.20. Yard Sign
Freestanding Sign	N	N	SP	SP	SP	SP	SP	SP	SP	N	§6.B.2.21. Freestanding Sign
Vertical Blade/ Banner Sign	N	N	N	N	SP	SP	SP	SP	N	N	§6.B.2.22. Vertical Blade / Banner Sign
Wall Mural	N	N	L	L	L	L	L	L	L	N	§6.B.2.23. Wall Mural
Roof / Skyline Sign	N	N	N	SP	SP	SP	SP	SP	SP	N	§6.B.2.24. Roof / Skyline Sign

4. ADDRESS SIGNS

a. A sign, individual numerals or letters, or a nonelectrical nameplate identifying the property address is required for all real property as follows:
   i. Each ground story non-residential use must identify the street address either on the principal entrance door or above or beside the principal entrance of the use.
   ii. All residential building types must identify the street address either on the principal entrance door, above or beside the principal entrance, or on a mailbox.

b. Address signs must be made easily visible through the use of colors or materials that contrast with the background material they are attached to and must be conspicuously located to provide visibility from the thoroughfare that the building faces.

c. Address signs must be twelve (12) inches in height or less and may include the name of the occupant.

5. EXEMPT SIGNS

a. The following signs are exempt from regulation under this Section:
   i. A public notice or informational sign required by federal, state, or local law, regulation, or ordinance and any special event, directional, or other sign erected by a government agency or public utility in the performance of public duty;
   ii. Names of buildings, dates of erection, commemorative tablets and the like when carved into stone, made of cast metal, or other permanent type of material;
   iii. Credit card, trading stamp, or trade association signs not exceeding one-half (0.5) square feet each and not exceeding ten per establishment;
   iv. A clock, thermometer, barbershop pole or similar device not part of a permanent sign;
   v. The flag of any nation, state, or City if displayed in a manner conforming to the Flag Code (4 USC §5 (2011) et seq.);
   vi. Historic building identification;
   vii. Holiday signs and/or decorations, yard sale & garage sale signs;
   viii. Elections signs; and
   ix. Any sculpture, statue, relief, mosaic, or mural that is a work of art or otherwise decorative and does not include a commercial message or symbol.

6. PROHIBITED SIGNS

a. The following signs are prohibited:
   i. Any sign that flashes, moves, blinks, rotates, simulates motion, features electronic sign copy, or has illumination that changes intensity over time;
   ii. Signs that emit audible sounds, odors, or visible matter;
   iii. Signs attached to nature or landscape elements, including trees, rocks, and fences;
   iv. The tacking, posting or otherwise affixing of signs to the exterior walls of buildings and structures;
   v. Signs that interfere with free passage from or obstructs any fire escape, downspout, window, door, stairways, ladder, or opening intended as a means of ingress or egress or to provide light or air;
   vi. Billboards or signs advertising goods or services not provided on the premises;
   vii. Any sign and/or sign structure that obstructs the view of, is confusing with, or imitates official traffic sign, signal, or device;
   viii. Inflatable signs, such as balloons and other gas inflated objects;
   ix. Sign structures that no longer contain signs;
   x. Signs mounted to motor-vehicles that are not in operation, including motor-vehicles painted or skinned to function as a sign; and
   xi. Outdoor advertising signs that are not compliant with M.G.L. Chapter 93, Section 29-33.

7. TEMPORARY SIGNS

a. Unless otherwise specified, temporary signs are permitted for a maximum of thirty (30) total days and do not require a zoning permit, but are subject to the following standards:
   i. Banner: A temporary sign that is printed or displayed upon flexible material with or without frames, that identifies a new business or advertises a special sale, event, or activity.
      a). One (1) banner sign no greater than forty (40) square feet is permitted per lot frontage.
      b). Banners must be secured to a building facade along all four sides at all times.
   ii. Construction Sign: A temporary sign intended to provide information about current construction on a site and the parties involved in the project.
      a). One (1) construction sign no greater than thirty-two (32) square feet per side is permitted per development site.
      b). A construction sign may be erected only after issuance of a building permit, and must be removed within two (2) days of issuance of a certificate of occupancy.
   iii. Real Estate Sign:
      a). One (1) real estate sign no greater than twelve (12) square feet is permitted per lot frontage.
      b). A real estate sign that advertises property for lease or sale may be posted only for the duration the property is offered for lease or sale, and must be removed within seven days of lease or closing.

8. SIGN MAINTENANCE

a. All signs, including nonconforming signs, together with any supports, braces, anchors, and other supporting hardware, must be maintained in good condition. Any damage to or deterioration of a sign must be repaired within 30 days of receipt of notice from the Building Official.

b. When an existing sign is removed, replaced, or repaired, all supports, braces, anchors, and other supporting hardware that is not longer required must be removed, and any surfaces baring evidence of attachment must be repaired.

9. REMOVAL

a. Signs must be removed within 30 days of a user vacating a property.

10. SIGN ILLUMINATION

a. Conforming signs may be illuminated according to the following:
   i. General
      a). Illuminated signs indicating if a business is open must be turned off except during the hours of operation.
   ii. External Illumination
      a). An externally illuminated sign is characterized by the use of artificial light reflected off the surface of a sign.
      b). External light sources must be shielded so that they illuminate only the face of the sign and do not shine directly onto a public right-of-way or onto adjacent properties.
      c). Light fixtures that project from the facade of a building for externally illuminated signs are exempt from setback requirements, but should be simple and unobtrusive in design and not obscure the sign content.
   iii. Internal Illumination
      a). An internally illuminated sign is characterized by the use of artificial light projecting through or from behind the surface of a sign.
      b). Channel letters may be internally lit or back-lit.
      c). Blade signs may be internally lit if the background is opaque or of a darker color than the message of the sign and the lettering is no more than 50% of the surface area of the sign
      d). Exposed neon is only permitted for wall or windows signs.
   iv. Raceways
      a). If a raceway is necessary, it cannot extend in width or height beyond the area of the sign.
      b). A raceway must be finished to match the background wall or canopy or integrated into the overall design of the sign.

11. BLADE SIGN

A small, two-sided sign that is attached to and projecting perpendicularly from the facade of a building that identifies a commercial establishment. Blade signs are intended to be viewed by pedestrians on the same side of the street.

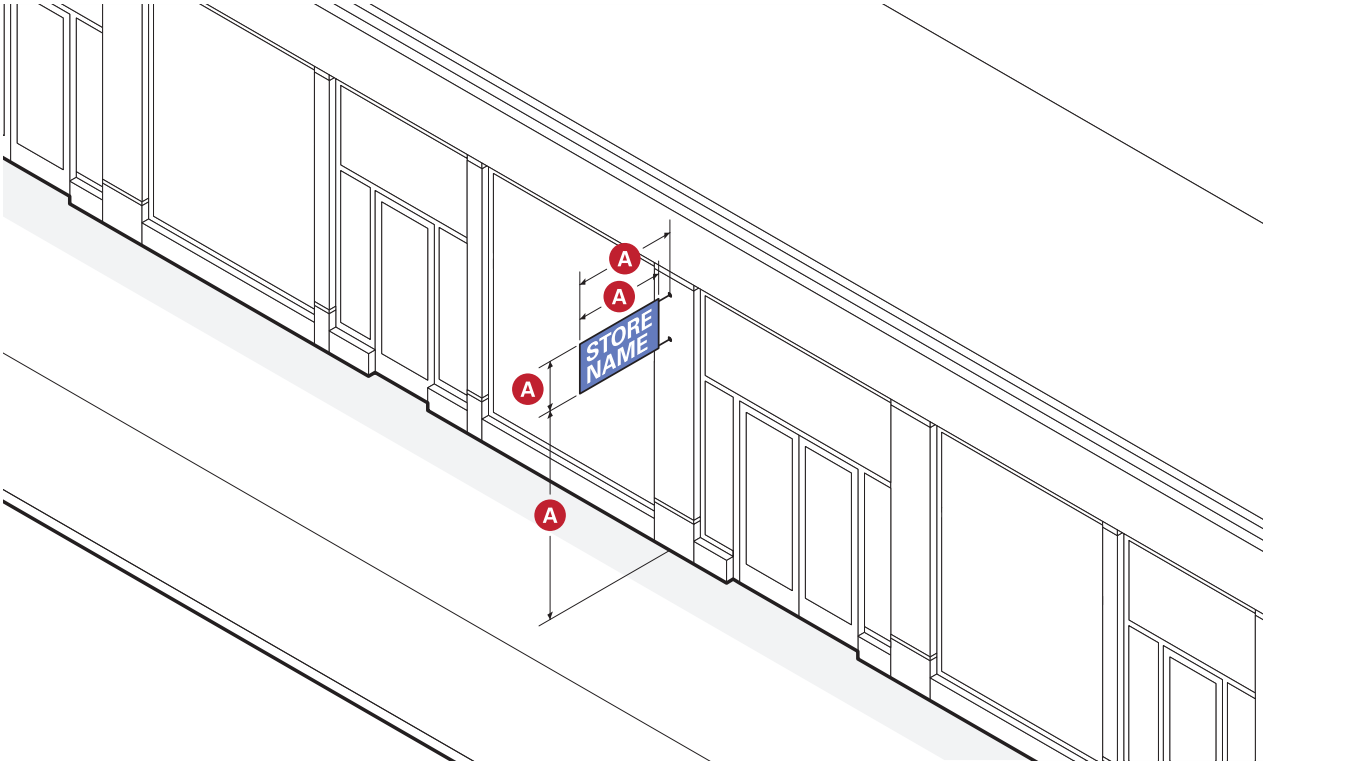

SIZE	
Area (max.)	6 sq. ft. / side
Width (max.)	4 feet
Height (max.)	3 feet
Thickness (max.)	6 inches

LOCATION	
Clear Height over Sidewalk (min.)	8 feet
Projection from Facade (max.)	4 feet
Number of Signs	1 per Tenant

STANDARDS

i. Blade signs are prohibited for upper story businesses.
ii. A blade sign must be located within ten (10) feet of the principal entrance for the business it identifies.
iii. A blade sign, including any support hardware, must be mounted below the sills of the second story windows of multi-story buildings or below the roof line, parapet wall, or cornice of a single-story building.
iv. Any supports, braces, anchors, and other supporting hardware must be integral to the design of the sign.
v. Information type is limited to business name and logo. Additional information is prohibited.

12. WALL SIGN

A sign attached flat or mounted parallel to the facade of a building that identifies a commercial establishment. Wall signs are intended to be viewed by pedestrians on the opposite side of street.

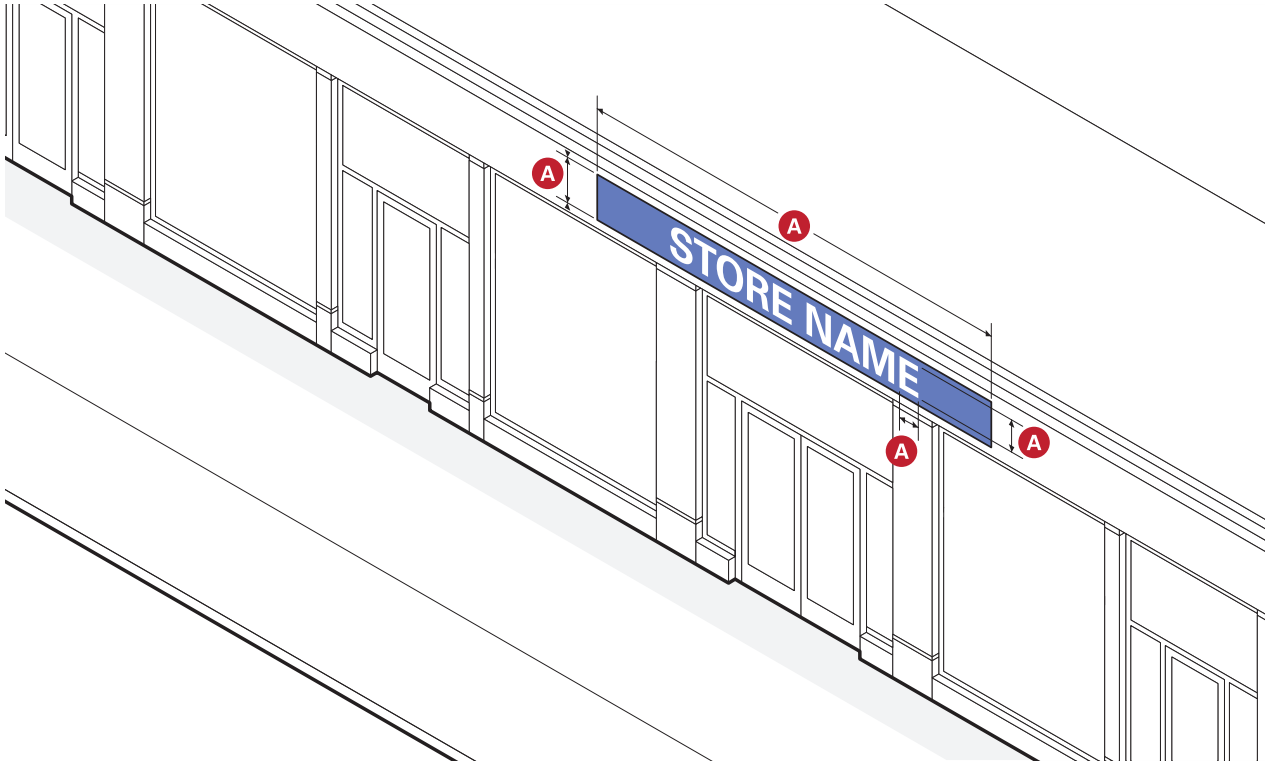

SIZE	
Area (max.)	40 sq. ft.
Height (min/max)	12 inches 4 feet
Width (max.)	90 % of facade width

LETTERING	
Width (max.)	75% of sign width
Height (max.)	75% of sign height
Projection from Facade (max.)	6 inches
Raceway Height (max.)	50% of Letter Height

LOCATION	
Number of Signs	1 per Tenant (2 per Corner Tenant)

STANDARDS

i. Wall signs are only permitted for ground story businesses.
ii. Internal illumination is prohibited.
iii. Wall signs are prohibited from covering windows or architectural details.
iv. No portion of a wall sign is permitted to extend above the lower eave line of a building with a pitched roof.
v. No portion of a wall sign is permitted to extend above the roof line or parapet wall of a flat roofed building.
vi. No portion of a wall sign is permitted to extend above the cornice or expression line of the base of a building.
vii. Information type is limited to business name and logo. Additional information is prohibited.

13. AWNING / CANOPY SIGN

A sign that is painted, screen printed, sewn, or adhered onto the surface of a awning or attached above, below, or to the face of an entry canopy that identifies a commercial establishment. Awning/canopy signs are intended to be viewed by pedestrians on the opposite side of street.

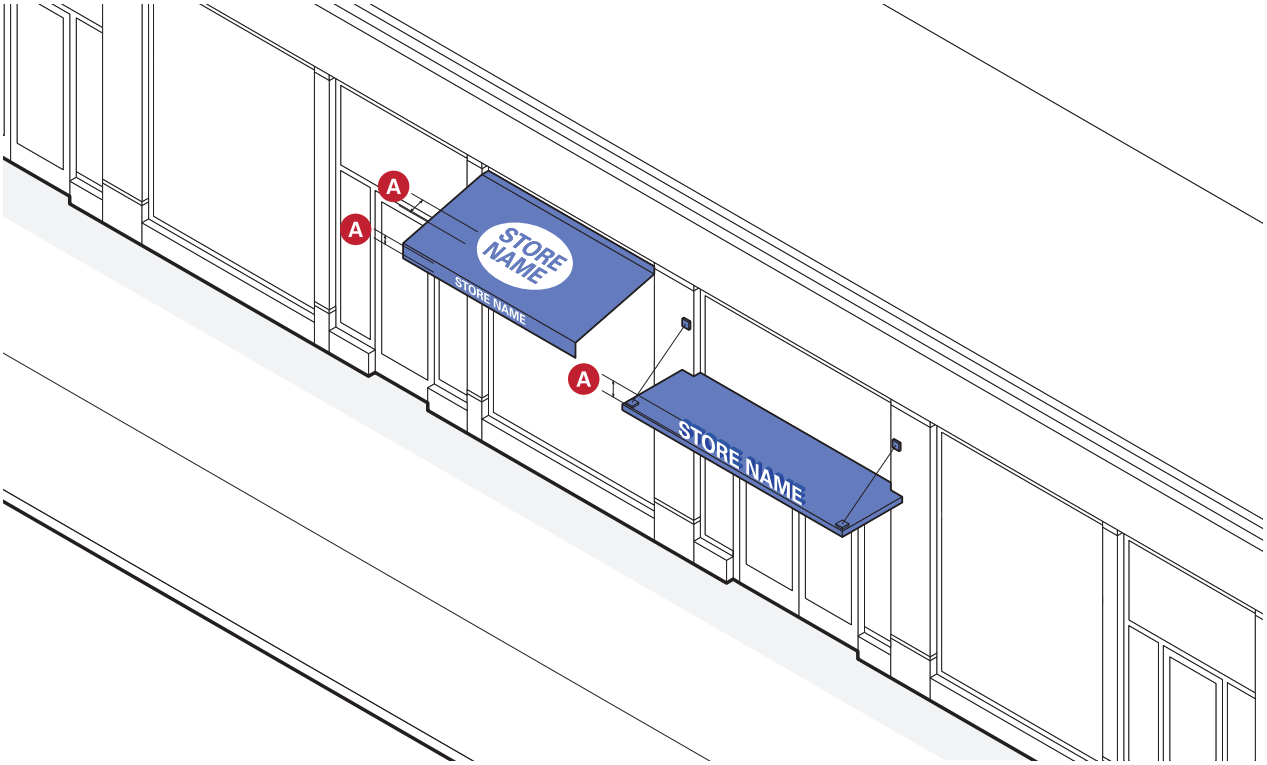

SIZE	
Area	--
Located on Valance (max.)	50% coverage
Located on Awning Slope (max.)	25% coverage
Projecting from Canopy (max.)	1 sq. ft. per linear foot of canopy width

LETTERING	
Height	--
Valance (max)	8 inches
Awning Slope (max)	18 inches
Projecting from Canopy (max)	12 inches

LOCATION	
Number of Signs per Awning	1
Number of Signs per Canopy	1

STANDARDS

i. Signs are not permitted on awnings or canopies that do not conform to the provisions for each type of building component. See §3.D. Building Components for more information.

ii. Signage located on the sloping portion of an awning is only permitted for storefronts where the typical area for a wall sign is missing.

iii. Signage is prohibited on upper story awnings and on the side of awnings with closed ends.

iv. Information type is limited to business name, logo, and address. Additional information is prohibited.

14. SUSPENDED SIGN

A small, two-sided sign mounted to the underside of an awning, canopy, or roof of a porch that identifies a commercial establishment. Suspended signs are intended to be viewed by pedestrians at close range on the same side of the street.

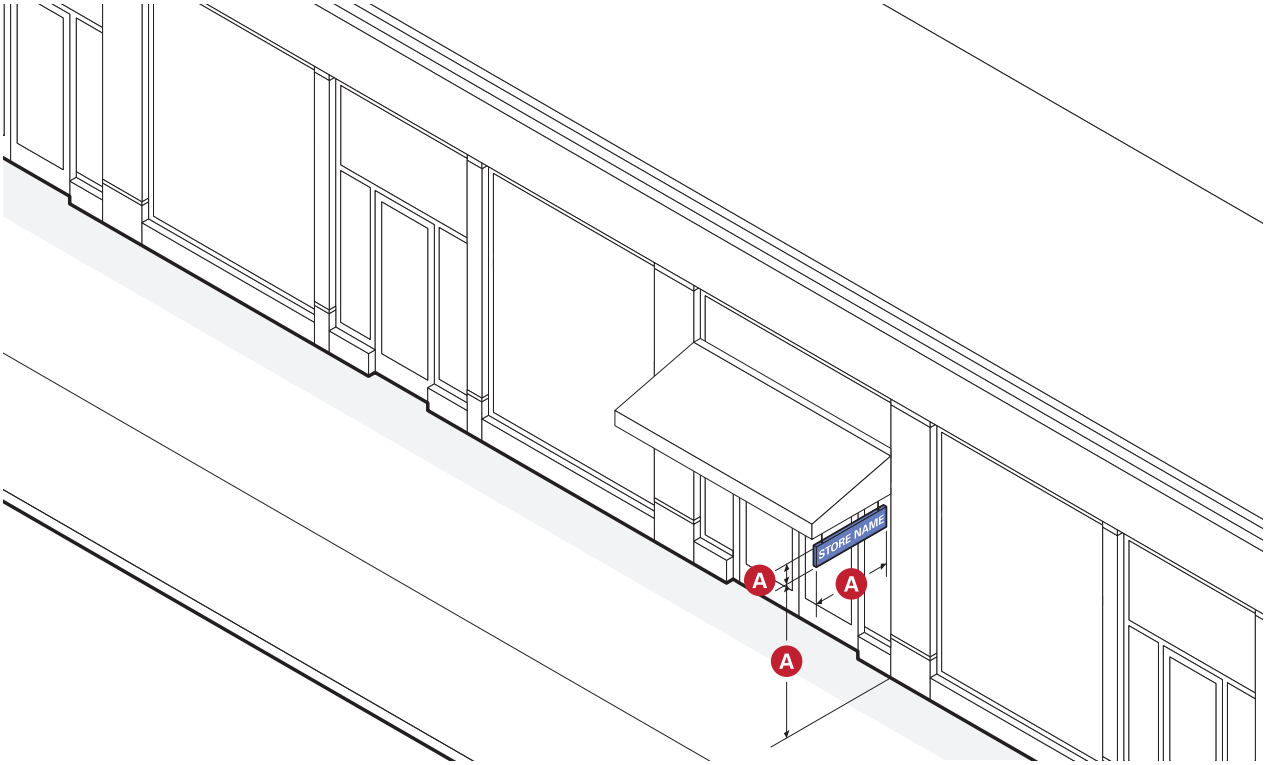

SIZE	
Area (max.)	4 sq. ft. / side
Width (max.)	3 feet
Height (max.)	3 feet

LOCATION	
Clear Height over Sidewalk/Porch (min.)	7 feet
Number of Signs	1 per Tenant

STANDARDS

i. A suspended sign may not extend beyond the edge of the awning or canopy it is mounted below.

ii. Information type is limited to business name or logo. Additional information is prohibited.

16. SIDEWALK SIGN

A portable, two-sided sign that is placed on the sidewalk to identify a commercial establishment or advertise daily specials or sales. Sidewalk signs are intended to be viewed at close range by pedestrians on the same side of the street.

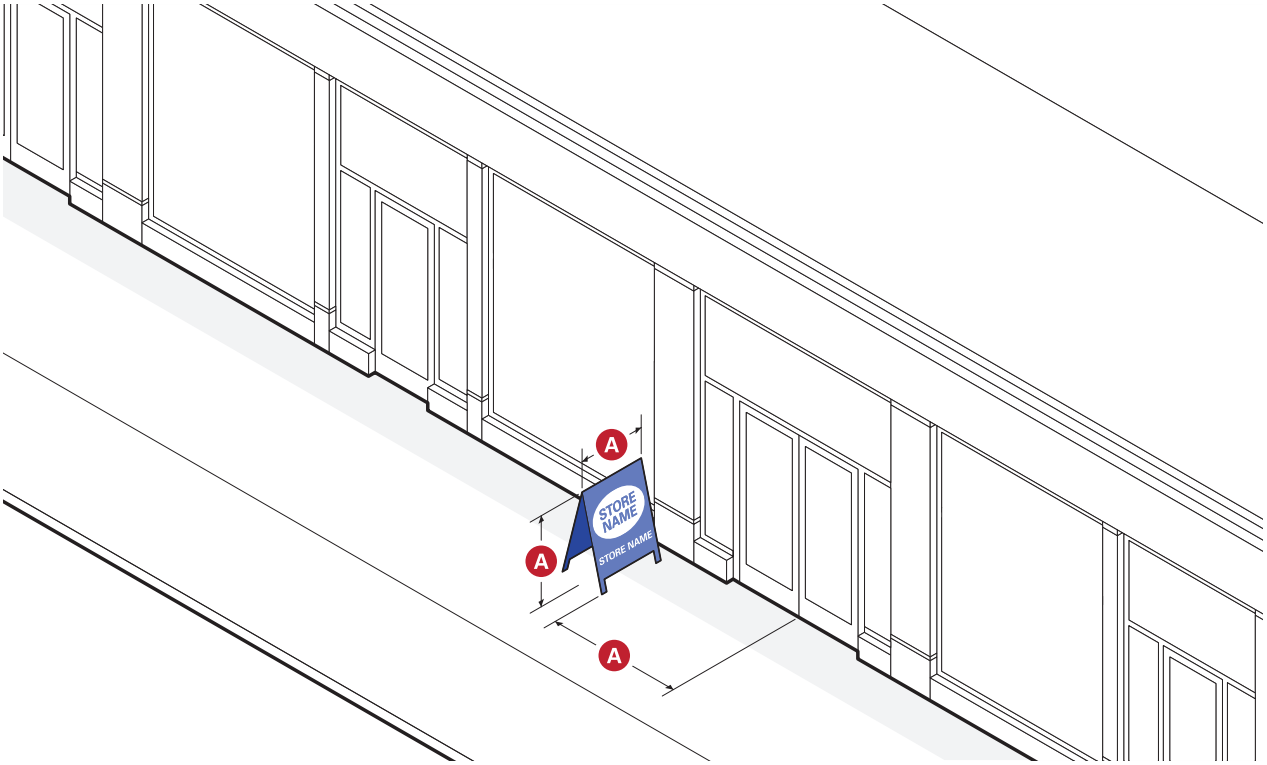

SIZE	
Area (max.)	6 sq. ft. / side
Width (max.)	2 feet
Height (max.)	3 feet

LOCATION	
Distance from Principal Entrance (max.)	8 feet
Number of Signs	1 per Tenant

STANDARDS

i. One (1) Sidewalk sign is permitted per ground story tenant.
ii. Sidewalk signs may be placed outdoors on site or on a public sidewalk during business hours and must be removed when the business is closed.
iii. Sidewalks signs displayed on a public sidewalk are prohibited from encroaching into the walkway of the sidewalk or interfering with pedestrian travel in any way.
iv. A sidewalk sign must be vertically oriented, with a height greater than its width and made of wood, metal, or slate (chalkboard).
v. A sidewalk sign is not permitted not be illuminated or contain any electronic components.
vi. A sidewalk sign may not be placed outdoors when high winds, heavy rain, or heavy snow conditions are present. The Department Public Works may remove a sidewalk sign during snow removal operations, and is not liable for damage to a sidewalk sign caused by snow removal operations.

17. WINDOW SIGN

Individual letters, numerals, or a logo applied directly to the inside of a window or door to identify a commercial establishment. Window signs are intended to be viewed at close range by pedestrians.

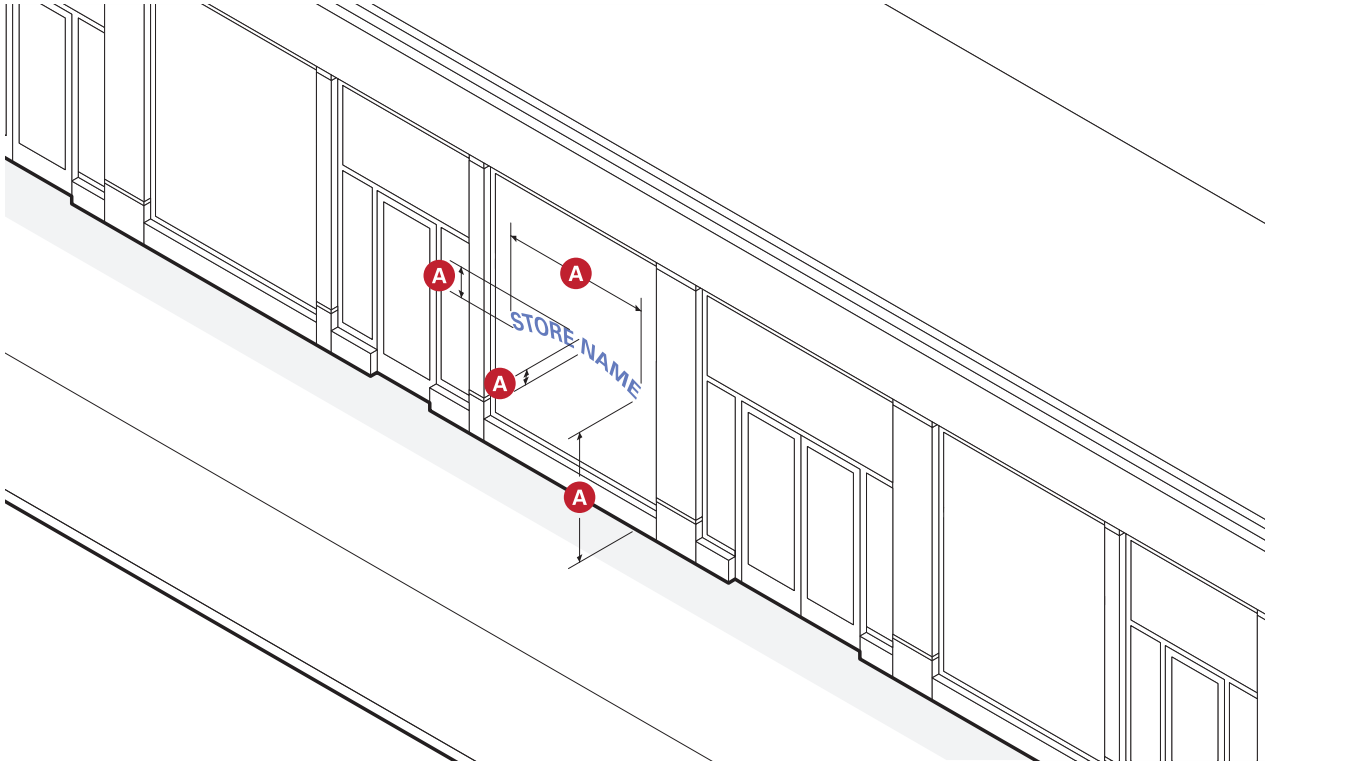

SIZE	
Area (max. of total window glass)	20%
Width (max.)	5 feet
Height (max.)	3 feet

LETTERING	
Height (max.)	18 inches

LOCATION	
Height above Sidewalk (min.)	5 feet
Number of Signs	1 per Window

STANDARDS

i. Windows signs must be applied directly to inside of the windows glass, at or above eye level, and have a transparent background.

ii. Information type is limited to business name, logo, hours of operations, and product types. Additional information is prohibited.

19. DISPLAY CASE

A wall mounted, lockable, framed cabinet with a transparent window to display a changeable menu or list of event showtimes. Display cases are intended to be viewed at close range by pedestrians.

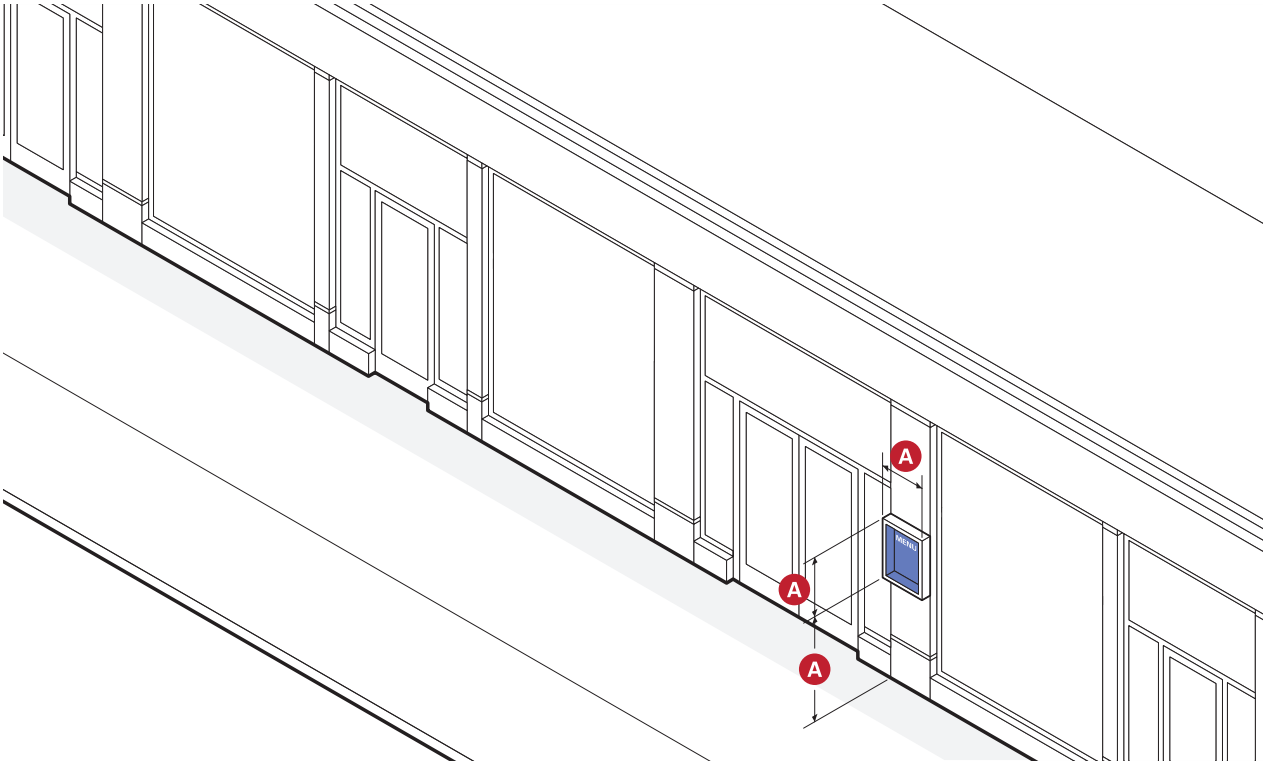

SIZE	
Area	6 sq. ft.
Width (max.)	3 feet
Height (max.)	3 feet

LOCATION	
Height above Sidewalk (min.)	4 feet
Number of Signs	1 per Tenant

STANDARDS

i. Display cases must be attached to the facade or wall of a recessed storefront entrance.

ii. Display cases may be internally or externally illuminated.

20. YARD SIGN

A two-sided sign suspended from support hardware and mounted in a front yard between the front lot line and the building facade. Yard signs are intended to be viewed at close range by pedestrians on the same side of the street and motorists.

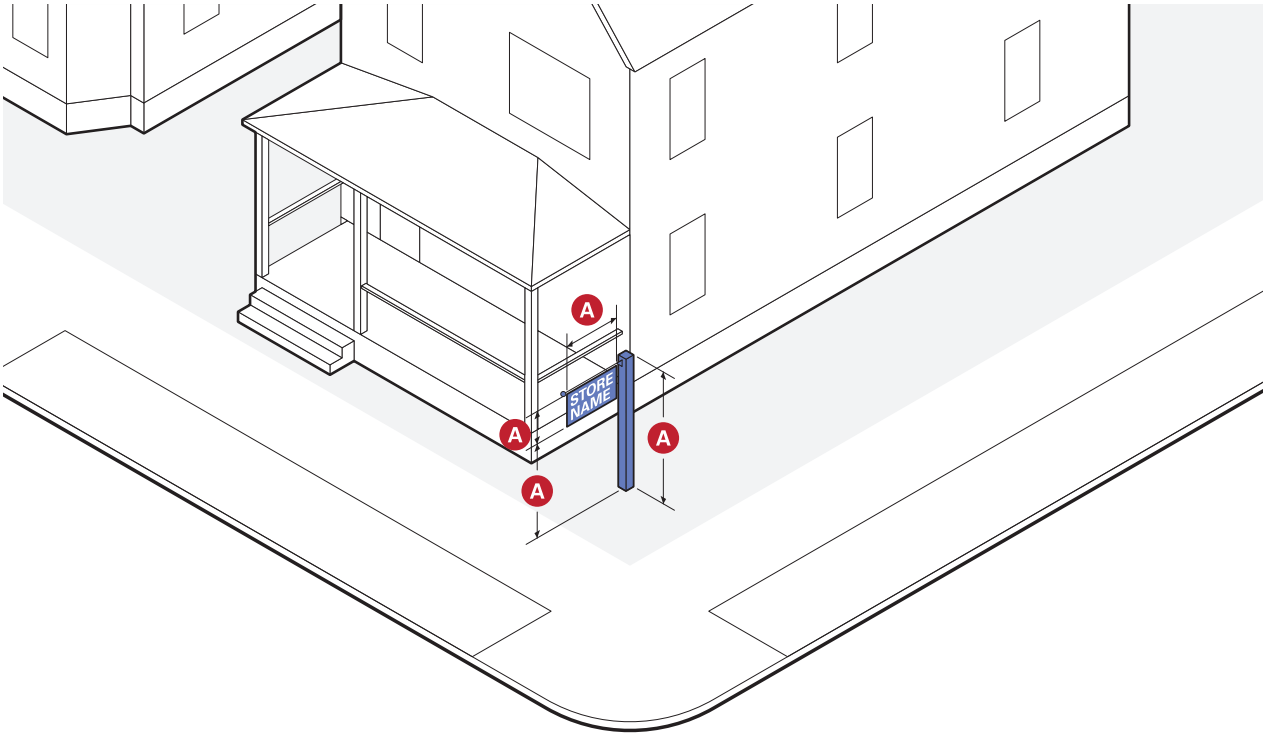

SIZE	
Area (max.)	6 sq. ft. / side
Width (max.)	3 feet
Height (max.)	3 feet

LOCATION	
Clear Height above Yard (min.)	12 inches
Overall Height (max.)	5 feet
Number of Signs	1 per Lot

STANDARDS

i. Yard signs work well for home based or commercial businesses operating in residential building types in mixed use districts.

ii. Information type is limited to business name, logo, and address. Additional information is prohibited.

21. FREESTANDING SIGN

A sign attached to a pedestal or perimeter wall. Ground signs are intended to be viewed by motorists.

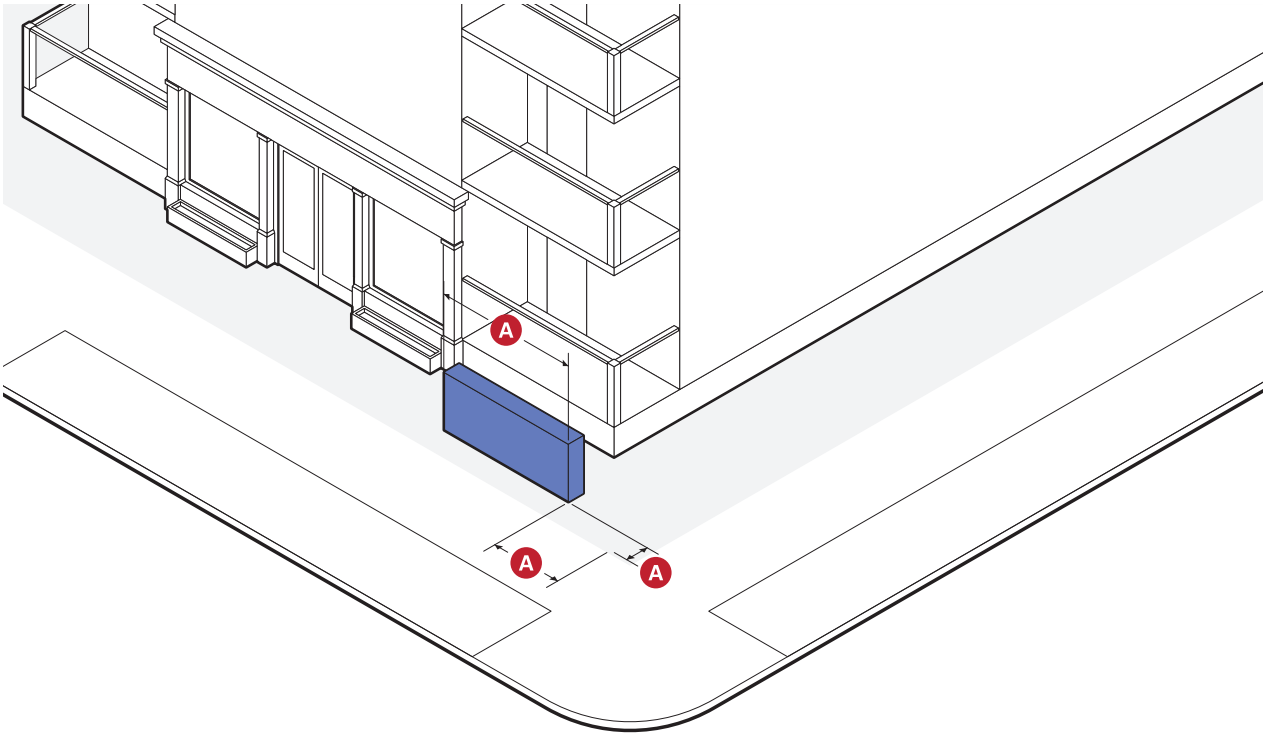

SIZE	
Area (max.)	32 sq. ft.
Width (max.)	5 feet

LOCATION	
Number of Signs	1 per Frontage
Front Setback (min.)	1 foot
Side Setback (min.)	5 feet

STANDARDS

i. Freestanding signs must be located in close proximity to the principal entrance of the building or to the vehicular entrance to a parking lot.

ii. Information type is limited to building or site name and address. Additional information is prohibited.

22. VERTICAL BLADE / BANNER SIGN

A tall, narrow, two-sided sign that is attached to and projecting perpendicularly from the facade of a building that identifies a commercial establishment. Vertical blade/ banner signs are intended to be viewed by pedestrians and motorists from a distance.

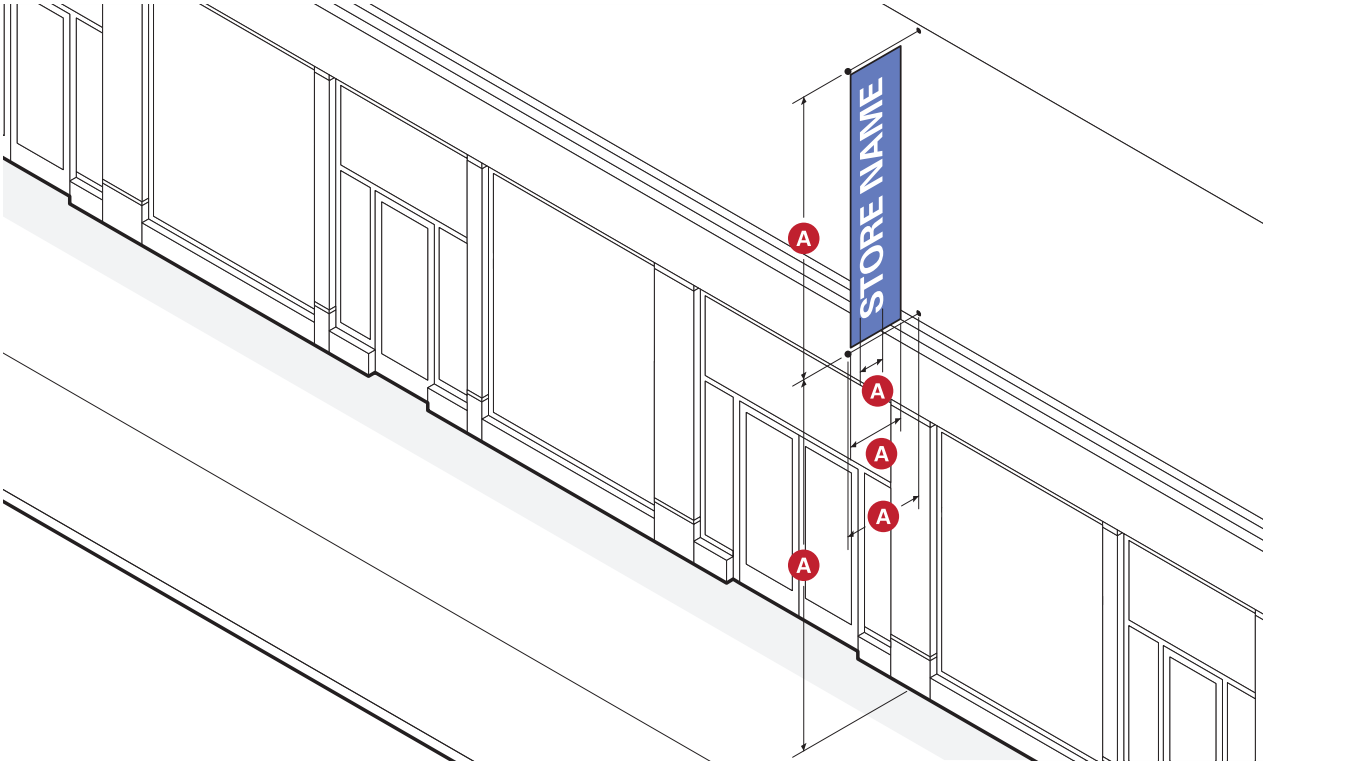

SIZE	
Width (max.)	4 feet
Height (max.)	10 feet
Thickness (max.)	10 inches

LETTERING	
Width	75% of Sign Width

LOCATION	
Clear Height over Sidewalk (min.)	above 1st Story
Projection from Facade (max.)	6 feet
Number of Signs	1 per 15 feet of Facade Width (4 max.)

STANDARDS

i. No portion of the sign may project above the roof-line of the facade to which it is attached.

ii. Information type is limited to business name and logo. Additional information is prohibited.

23. WALL MURAL

A sign that is directly painted on to the exterior wall of a building or screen printed, sewn, or adhered onto a canvas-like material that is mounted flush with the facade of a building that identifies a commercial establishment. Wall murals are intended to be viewed by pedestrians and motor vehicles from a distance.

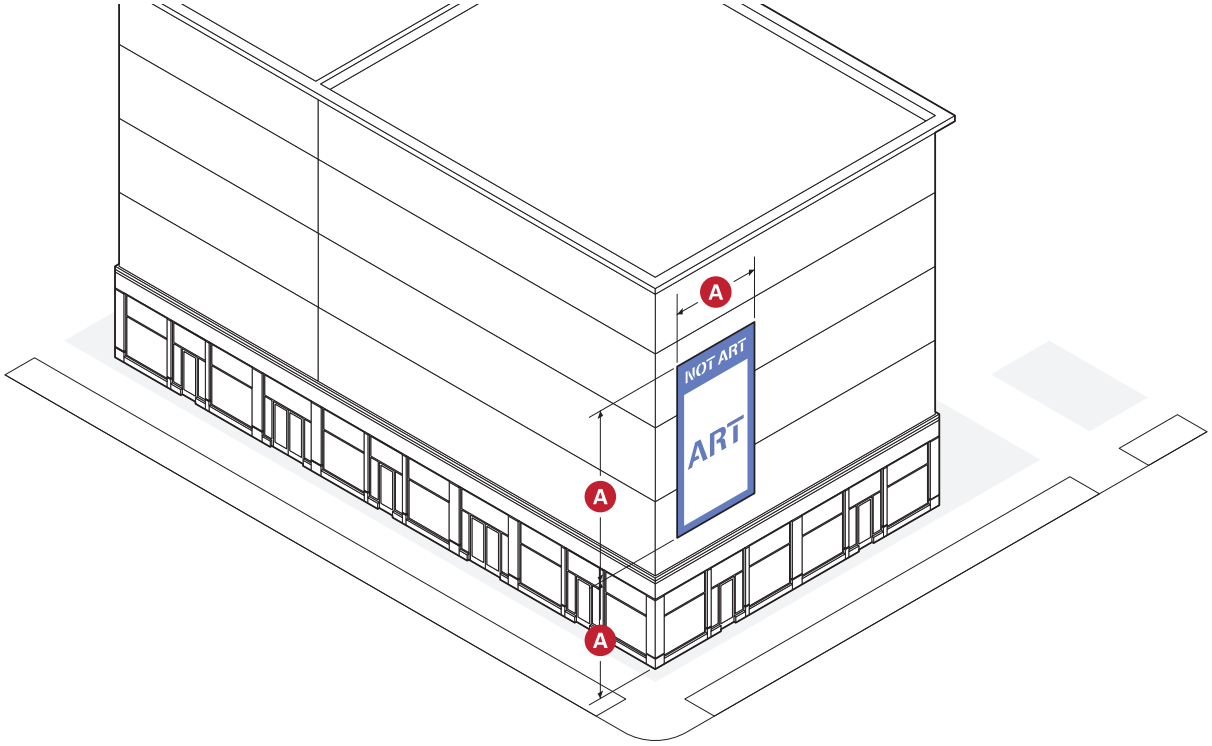

SIZE	
Area (max.)	1000 sq. ft.
Width (max.)	50 feet
Height (max.)	50 feet

LOCATION	
Height above Ground (min.)	1 Story
Number of Signs	1 per Building

STANDARDS

i. Lettering or logos must be limited to no more than twenty percent (20%) of the surface area of the wall mural.
ii. Only external illumination is permitted.

24. ROOF / SKYLINE SIGN

A sign erected on the roof or mounted to the uppermost horizontal architectural band of a building to identify the name of the building or primary tenant. Roof/skyline signs are intended to be viewed by pedestrians and motorists from a distance and serve as an icon for the building.

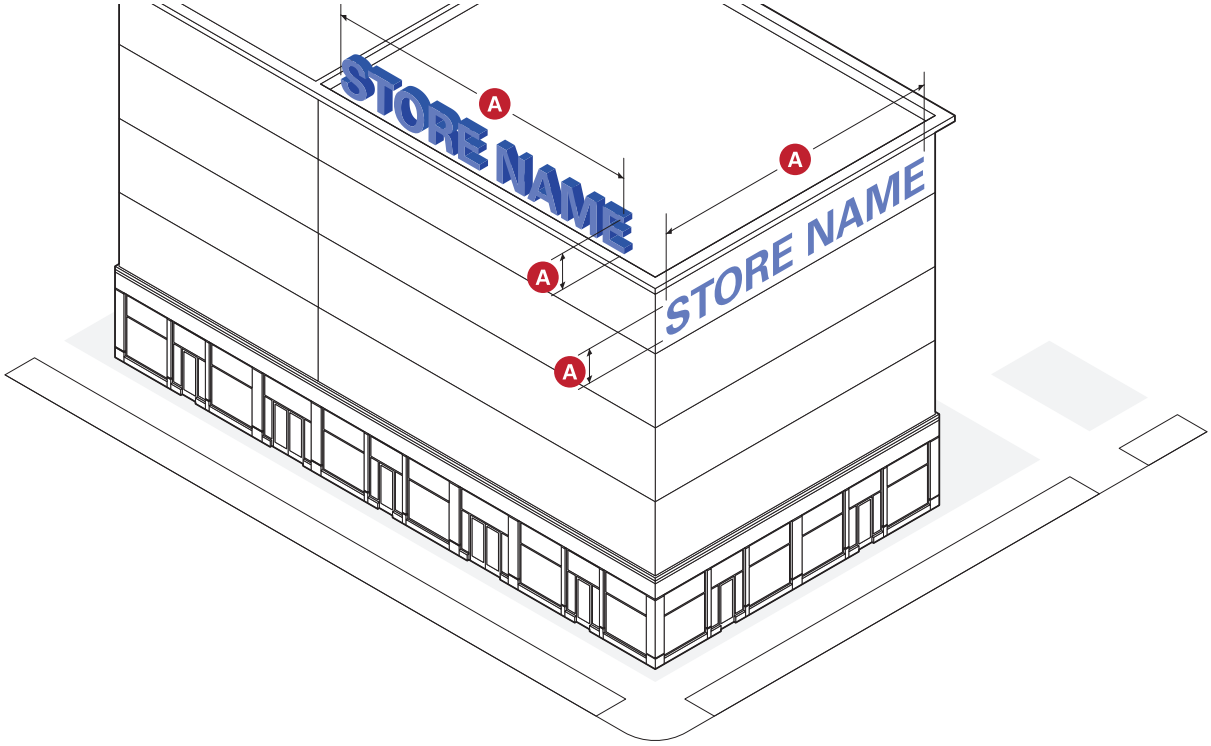

SIZE	
Area (max.)	250 sq. ft.
Width (max. % of facade width)	75%
Height (max.)	15 feet
Raceway Height (max.)	50% of Letter Height

LOCATION	
Number of Signs	1 per Building

STANDARDS

i. Roof/skyline signs are only permitted on high-rise buildings.
ii. No portion of a roof/skyline sign is permitted to extend below the start of highest story of a building or above the roof line, parapet wall, or cornice of the top portion of a facade and is prohibited from covering windows or architectural details.
iii. Only internal illumination is permitted.
iv. Information type is limited to building or primary tenant name. Additional information is prohibited.

H. OUTDOOR LIGHTING

1. PURPOSE

a. To allow adequate night time lighting that provides safety, utility, and security while prohibiting excessive light trespass beyond property boundaries.
b. To protect residential areas from the glare and ambient spillover of lighting in adjacent commercial areas.
c. To protect drivers from the glare caused by lighting on properties that fronting onto public thoroughfares.
d. To reduce the consumption of electricity for lighting purposes.
e. To require lighting fixtures and layout patterns that contribute to unified exterior lighting design of development.

2. APPLICABILITY

a. The provisions of this section apply to all outdoor lighting fixtures except for the following:
   i. Sign lighting (see §6.G. Signs);
   ii. Holiday lighting;
   iii. Outdoor lighting used for emergency equipment and work conducted in the interest of law enforcement or for public health, safety, or welfare;
   iv. Ground mounted pedestrian lighting

3. PROHIBITED LIGHTING

a. Lighting that unnecessarily illuminates and substantially interferes with the use or enjoyment of any other property is prohibited.
b. The following type of outdoor light fixtures are prohibited:
   i. Low pressure sodium and all mercury vapor gas-discharge lamps;
   ii. Cobra-head fixtures having dished or drop lenses or refractors;
   iii. Searchlights and other high-intensity narrow-beam fixtures; and,
   iv. Strobe lights and rotating lights.

4. GENERAL STANDARDS

a. Light levels are specified, calculated, and measured in maintained footcandles and are measured at ground level, with the light-reading sensor of a light meter held parallel to the ground, pointed up.
b. All outdoor light fixtures must be energy efficient and produce at least 80 lumens per watt of energy consumed, as documented by manufacturer's specifications or the results of an independent testing laboratory.
c. All outdoor light fixtures that emit light in excess of 45,000 lumens are prohibited.
d. The use of sensors, timers, or other means to activate outdoor light fixtures on demand and only when it is needed is encouraged to conserve energy, provide safety, and promote compatibility between different land uses.
e. Motion sensor light fixtures must shut off after ten (10) minutes and must not be triggered by off-site activity.

5. DESIGN STANDARDS

a. Shielding
   i. All outdoor light fixtures must be full cutoff or fully shielded to prevent light at or above horizontal (ninety degrees [90°] above nadir) and limited to a value not exceeding ten percent (10%) of lamp lumens at or above eighty degrees (80°), as defined by the Illuminating Engineering Society of North America (IESNA, or IES).
   ii. All outdoor light fixtures must be fitted so that no portion of the light source or drop lens is visible below the fixture when viewed directly from the side.
b. Location
   i. All outdoor lighting fixtures must be placed and directed to prevent light trespass or glare onto adjacent thoroughfares or properties in a manner that may distract or interfere with the vision of drivers or create a nuisance for adjacent residential uses.
   ii. Lighting intended to illuminate areas for pedestrian travel and/or seating must be mounted between twelve (12) and fifteen (15) feet in height.
   iii. Lighting intended to illuminate areas for vehicular travel and parking are not permitted above thirty (30) feet in height.
   iv. Light fixtures located within fifty (50) feet of the side or rear lot line abutting the Neighborhood Residence are not permitted above fifteen (15) feet in height.
c. Illuminance
   i. Light levels measured at the front lot line exceeding two (2.0) foot candles are prohibited.
   ii. Light levels measured at any side or rear lot line of any property abutting a Neighborhood Residence district exceeding one (1.0) foot candles are prohibited.

6. SPECIFIC LIGHTING STANDARDS

a. Vehicular Canopies
   i. Lighting for any canopy area over fuel sales, drive-through lanes, automated teller machines, or similar structures must use recessed luminaire fixtures and be designed and located so as to prevent glare onto adjacent properties.
   ii. Highly reflective material installed on the underside of the canopy is prohibited.
b. Security Lighting
   i. Building-mounted (wall pack) security light fixtures are not permitted to project above the fascia or roof line of a building.
   ii. Building-mounted (wall pack) security light fixtures are only permitted for loading, storage, or service areas and/or rear entrances to buildings and are not permitted as substitutes for appropriate lighting fixtures for parking areas or pedestrian walkways.
c. Accent Lighting
   i. Only lighting used to accent architectural features, landscaping, or art may be directed upward, provided that light fixtures are located, aimed, or shielded to reflect the light off surfaces (or grazing surfaces) to emphasize form and texture and minimize light spill into the night sky.
   ii. Architectural lighting must use multiple light sources to create visually interesting pools of light or point

lighting that accent architectural features. Dull, uniform lighting is prohibited.

d. Entrances and Exits
   i. All entrances and exits non-residential buildings open to the general public and residential buildings with more than six (6) dwelling units must be lit during nighttime hours to ensure the safety of persons and the security of the building.
e. Parking Area Lighting
   i. All commercial parking areas are required to provide lighting during night time hours of operation.

I. OUTDOOR CAFE SEATING

1. GENERAL

a. Outdoor cafe seating is permitted as an ancillary activity of any Eating & Drinking Establishment.
b. The operator of the outdoor cafe seating is responsible for the proper maintenance of the cafe area at all times, including proper disposal of all trash generated.

2. APPLICABILITY

a. This section is applicable to all outdoor cafe seating located in a frontage or on a public sidewalk.

3. CAFE AREA DIMENSIONS

a. Outdoor cafe seating areas must be between six (6) feet and fifteen (15) feet in depth from the facade the building.
b. A minimum four (4) foot wide clear path of access must be maintained to the principal entrance.
c. Outdoor cafe seating must be located adjacent to and may not extend beyond the establishment it serves.
d. Outdoor cafe seating areas must comply with the sidewalk standards of Article 8 Public Realm Standards.

4. FURNITURE

a. Furnishings may only consist of moveable tables, moveable chairs, moveable umbrellas, required enclosures, and portable or mounted heaters.
b. All furnishing must be commercial grade and manufactured for outdoor use of safe, sturdy, and durable materials, such as wood, steel, or wrought iron.
c. When not intended for use during the winter months, outdoor cafe furnishings must be removed and stored indoors.
d. Tables and chairs for each establishment must match in material and style.
e. Tables larger than three (3) feet six (6) inches in width or diameter are not permitted.
f. Standing or stooled table ledges, if provided, must be eighteen (18) inches in depth.
g. Heaters are encouraged to extend the use of outdoor cafe seating during colder weather. The following standards apply:
    i. Heating fixtures require approval by the Fire Department.
    ii. Heaters may be freestanding or mounted to the underside of an awning.
    iii. Portable heaters must be stored indoors when the business is closed.
h. Host stands should complement the chairs and tables in material and style.

5. WEATHER PROTECTION

a. Awnings or individual table umbrellas are encouraged to provide protection from the weather.
    i. Awnings must be secured to a storefront or other exterior wall of a building.
    ii. Awnings and umbrellas should be canvas or other non-vinyl material.
    iii. Awnings and umbrellas should provided shade for at least fifty percent (50%) of the outdoor cafe seating when provided.
b. Vertical wind breaks may be provided on each end of the cafe area, provided that the wind break is attached to and fits completely under an awning.
c. Any necessary frames or supports for awnings or windbreaks are permitted.

6. ENCLOSURES

a. The perimeter of outdoor cafe seating areas must be defined and enclosed on all sides by any combination of metal fencing, bollards and chain, or planters.
b. Metal Fencing
    i. Fencing must be thirty-six (36) inches or less in height.
    ii. The maximum gap permitted between fence segments is four (4) inches.
c. Bollards & Chain
    i. Metal or wooden bollards must be thirty-six (36) inches or less in height.
    ii. Bollards may be linked with rope or chain that hangs no less than thirty (30) inches from the ground at its lowest point.
d. Planter Boxes
    i. Planters or planter enclosures must be between eighteen (18) inches and twenty-four (24) inches in height.
    ii. The combined height of planters and live plants must not exceed four (4) feet from sidewalk grade.
    iii. Healthy, living plants are required.
    iv. Planters and flower boxes must be made of safe, durable materials manufactured for outdoor use.

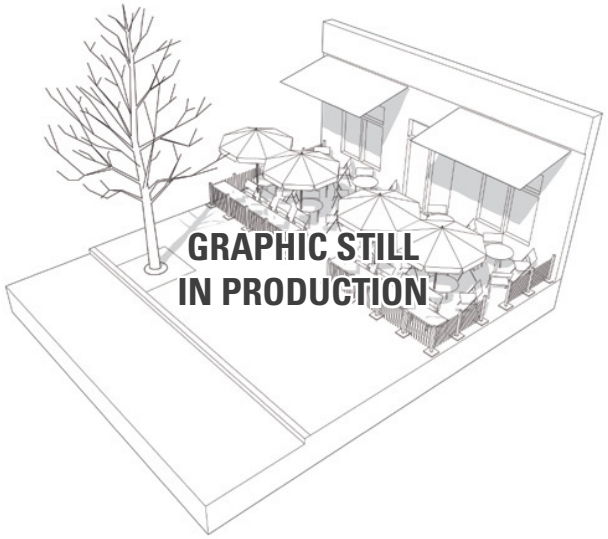

ARTICLE 7: PARKING, SERVICE, & MOBILITY

BICYCLE PARKING 215
- Purpose 215
- Applicability 215
- Required Bicycle Parking 215
- Short-Term Bicycle Parking 215
- Long-Term Bicycle Parking 215
- Standards for all Bicycle Parking 216

MOTOR VEHICLE PARKING 219
- Purpose 219
- Applicability 219
- Parking Requirements 219
- Understanding the Parking Table 219
- Parking Adjustments 219
- Off-Site Accessory Parking 222
- Standards for alL off-street Parking 222
- Parking Lots 223
- Structured Parking 223
- Curb Cuts 224
- Driveways & Vehicular entrances 224
- Flexible use of Accessory Parking 224

SERVICE ACCESS 225
- Loading Facilities 225
- Service Areas 225

MOBILITY MANAGEMENT 226
- Purpose 226
- Applicability 226
- Voluntary participation 226
- Mobility Management Plan 226
- Performance Review 226
- Mobility Management Associations 226
- Required Programs & Services 226
- Standards for Programs & Services 226
- Enforcement 228

A. BICYCLE PARKING

1. PURPOSE

a. To encourage and support the use of bicycles as a viable transportation option throughout the city and promote the use of bicycles at a rate that will help to achieve the mode share goals of the City's master plan.
b. To provide long-term bicycle parking intended for residents or employees that provides security and protection from the weather.
c. To provide short-term bicycle parking intended for customers of a business or visitors to a residence that provides a convenient and readily accessible place to park bicycles.
d. To establish design standards so that bicycles can be securely locked without undue inconvenience and be reasonably safeguarded from intentional or accidental damage when parked.

2. APPLICABILITY

a. This section is applicable to all real property within the City of Somerville except as follows:
   i. Non-residential uses with five-thousand (5,000) square feet of gross leasable floor area or less are exempt.
b. For real property located in more than one municipality, bicycle parking required by this section need not be located within the City of Somerville.

3. REQUIRED BICYCLE PARKING

a. Required Spaces
   i. The minimum number of bicycle parking spaces required for each principal use category is specified on Table 7.1.
   ii. When there is more than one principal use of real property, the required bicycle parking is the sum of the required parking for the individual uses.
   iii. There is no individual bicycle parking requirement for accessory uses. However, if the required number of bicycle parking spaces on Table 7.1 is based on square footage, the net floor area of any accessory use(s) on a lot is added to the gross leasable floor area of the principal use to determine the required number of spaces.
   iv. Wherever the calculation for required bicycle parking spaces results in a fractional value, the fractional value is rounded up to the next whole number.
   v. Provided bicycle parking may include the actual spaces located within the lot and/or along the corresponding lot frontage when bicycle parking is installed within the furnishing zone of the sidewalk of an abutting public thoroughfare according to the following:
      a). Bike racks may be installed within the furnishing zone of a sidewalk of an abutting public thoroughfare provided that an encroachment permit is granted by the Board of Aldermen.
      b). In lieu of a separate bike rack, a hoop may be affixed to a parking meter, with approval from the Director of Traffic and Parking.
   vi. The number of bicycle parking spaces, not the number of bicycle parking fixtures, is used to determine compliance; i.e. a bicycle rack designed for parking two bicycles is counted as two bicycle parking spaces.
   vii. Existing bicycle parking must be maintained for the building, structure, or use which it was designed to serve, so long as the building, structure, or use exists and the parking is required by this Ordinance.
   viii. Bicycle parking must be maintained exclusively for the parking of bicycles and not for the storage of other objects.
   ix. Bicycle parking must be available for use at all times when the associated principal use is in operation, except when access may be restricted for necessary maintenance from time to time.

4. SHORT-TERM BICYCLE PARKING

a. Short-term bicycle parking may be provided in any combination of bicycle racks and/or bicycle lockers. Racks that are double height or require hanging of a bicycle are prohibited for short-term bicycle parking.
b. Short-term bicycle parking must be provided outside of a principal building and within fifty (50) feet of the principal entrance of the use served by the parking.
c. Short-term bicycle parking must be at the same grade as the abutting sidewalk or at a location that can be reached by an accessible route from the sidewalk that is a minimum of five (5) feet wide, with no steps and a six percent (6%) slope or less.
d. Bike racks may be installed within the furnishing zone of a sidewalk of an abutting public thoroughfare provided that an encroachment permit is granted by the Board of Aldermen. A rack may also consist of a hoop affixed to a parking meter, with approval from the Director of Traffic and Parking.
e. Any required short-term bicycle parking provided in a structure or under cover must be:
   i. Provided at ground level;
   ii. Provided free of charge;
   iii. Clearly marked as bicycle parking;
   iv. Separated from vehicle parking by a physical barrier to minimize the possibility of parked bicycles being hit by a vehicle; and
   v. Co-located in relative proximity to the nearest vehicular parking spaces.

5. LONG-TERM BICYCLE PARKING

a. Long-term bicycle parking may be provided through any combination of racks or lockers.
b. Long-term bicycle parking must be provided in a well-lit, secure location within the same building as the use the parking is intended to serve or within an accessory structure located within two-hundred (200) feet of the principal entrance of the building.
c. To provide security, long-term bicycle parking must either be:
   i. In a locked room;
   ii. In an area that is enclosed by a fence with a locked gate. The fence must be either 8 feet high, or be floor-to-ceiling;
   iii. Within view of an attendant or security guard;
   iv. In an area that is monitored by a security camera; or

v. In an area that is visible from employee work areas.

d. All required long-term bicycle parking spaces must be designed to provide continuous shelter from the elements.

e. Long-term bicycle parking serving multiple uses may be combined into a single area or accessory structure.

f. Where long-term bicycle parking is located adjacent to motor vehicle parking or loading facilities, a physical barrier must be provided to prevent potential damage to bicycles by other vehicles.

g. When twenty (20) or more long term bicycle parking spaces are provided, a minimum of five percent (5%) of the spaces must be three (3) feet by eight (8) feet in size to accommodate tandem bicycles or bicycles with trailers.

h. No more than twenty five (25%) of long term bicycle parking space may be provided as racks that require bicycles to be hung or lifted off the ground or floor.

6. STANDARDS FOR ALL BICYCLE PARKING

a. General

i. All bicycle parking must be designed and constructed in accordance the provisions of this section and with the City of Somerville's Bicycle Parking Guide. Additionally, the latest version of the Association of Pedestrian and Bicycle Professionals Bicycle Parking Guidelines may be referenced for guidance.

ii. Bicycle parking must be provided at no cost or fee to customers, visitors, employees, tenants, and residents.

b. Size & Layout

i. Each bicycle parking space must be two (2) feet by six (6) feet in size or the minimum required by the manufacturer of a bicycle rack or locker, whichever is more.

c. Access

i. Areas designed for bicycle parking spaces must have a hard, stabilized surface.

ii. Bicycle parking spaces must have at least one (1) access aisle at least five (5) feet wide to allow room for maneuvering. This access aisle must be kept free from obstructions.

iii. Bicycle parking spaces must be accessible without moving another bicycle or lifting or carrying a bicycle over any steps or stairs.

iv. Outdoor access routes must be appropriately lighted to allow for safe nighttime use.

d. Weather Protection

i. When provided, weather protection must be permanent, designed to protect bicycles from rainfall, and provide no less than seven (7) feet of clearance above ground level.

e. Bicycle Racks

i. All bike racks must:

a). Be a fixed-in-place stand that is securely anchored to the ground;

b). Provide support to the bicycle frame, allowing it to stand upright without the use of a kick-stand, and prevent the bicycle from falling over;

c). Be configured to provide two points of contact to allow locking of the frame and at least one wheel with a user-provided locking device;

d). Be constructed of materials that resist cutting, rusting, bending, or deformation; and

e). Be arranged in rows (with bicycles parked side-by-side) or in alignment (with bicycles parked end-to-end).

f. Bicycle Lockers

i. All bicycle lockers must:

a). Be securely anchored to the ground;

b). Be configured to provide support to the bicycle, allowing it to stand upright without the use of a kick-stand, and

c). Be secured by means of a lockable door or, alternatively, configured internally to allow locking of the frame and at least one wheel with a user-provided locking device;

g. Signage

i. If required bicycle parking is not visible from the street or principal entrance(s), a sign must be posted at the principal entrance(s) indicating the location of the parking. The D4-3 sign from the Manual on Uniform Traffic Control Devices (MUTCD) is recommended (see Figure 7.1).

FIGURE 7.1 MUTCD Figure D4-3

TABLE 7.1 Bicycle Parking Standards

SQ.FT. - Gross Leasable Square Footage
DU - Dwelling Unit

	Short Term (min)	Long Term (min)
ARTS & CREATIVE ENTERPRISE		
Artisan Production	1.0 / 10,000 sq. ft.	1.0 / 3,000 sq. ft.
Arts Education & Shared Workspaces	1.0 / 10,000 sq. ft.	1.0 / 3,000 sq. ft.
Arts Exhibition	1.0 / 10,000 sq. ft.	1.0 / 3,000 sq. ft.
Arts Sales & Services	1.0 / 10,000 sq. ft.	1.0 / 3,000 sq. ft.
Creative Studio	n/a	n/a
Design Services	1.0 / 10,000 sq. ft.	1.0 / 3,000 sq. ft.
Work/Live Creative Studio	1.0 / 10,000 sq. ft.	1.0 / 3,000 sq. ft.
AUTO-ORIENTED		
Commercial Vehicle Repair & Maintenance	n/a	n/a
Dispatch Service (except as noted below)	n/a	n/a
Towing Service	n/a	n/a
Gasoline Station	n/a	n/a
Motor Vehicle Parking (as noted below)	n/a	n/a
Car Share Parking	n/a	n/a
Commercial Parking	n/a	10, or 1.0 / 10 motor vehicle parking spaces‡
Off-Site Accessory Parking	n/a	n/a
Personal Vehicle Repair & Maintenance	n/a	n/a
Vehicle Sales	n/a	n/a
CIVIC & INSTITUTIONAL		
Community Center	1.0 / 10,000 sq. ft.	1.0 / 10,000 sq. ft.
Educational Facility	1.0 / classroom	4.0 / classroom
Hospital	10 per entrance	1.0 / 5,000 sq. ft.
Library	1.0 / 3,000 sq. ft.	1.0 / 5,000 sq. ft.
Minor Utility Facility	n/a	n/a
Major Utility Facility	n/a	n/a
Museum	1.0 / 2,000 sq. ft.	1.0 / 10,000 sq. ft.
Private Non-Profit Club or Lodge	1.0 / 2,000 sq. ft.	1.0 / 10,000 sq. ft.
COMMERCIAL SERVICES		
Animal Services (as noted below)	1.0 / 2,500 sq. ft.	1.0 / 10,000 sq. ft.
Veterinarian	1.0 / 2,000 sq. ft.	1.0 / 5,000 sq. ft.
Assembly & Entertainment	1.0 / 40 seats	1.0 / 10,000 sq. ft.
Banking & Financial Services (except as noted below)	1.0 / 2,000 sq. ft.	1.0 / 10,000 sq. ft.
Broadcast and/or Recording Studio	1.0 / 2,500 sq. ft.	1.0 / 10,000 sq. ft.
Building & Home Repair Services	1.0 / 2,500 sq. ft.	1.0 / 10,000 sq. ft.
Business Support Services	1.0 / 2,500 sq. ft.	1.0 / 10,000 sq. ft.
Caterer/Wholesale Food Production	1.0 / 2,500 sq. ft.	1.0 / 10,000 sq. ft.
Day Care Service	None	1.0 / 10,000 sq. ft.
Maintenance & Repair of Consumer Goods	1.0 / 2,500 sq. ft.	1.0 / 10,000 sq. ft.
Personal Services (except as noted below)	1.0 / 2,500 sq. ft.	1.0 / 10,000 sq. ft.
Health Care Provider	1.0 / 2,000 sq. ft.	1.0 / 5,000 sq. ft.
Recreation Facility	1.0 / 2,500 sq. ft.	1.0 / 10,000 sq. ft.

‡ whichever is greater

TABLE 7.1 Bicycle Parking Standards

SQ.FT. - Gross Leasable Square Footage
DU - Dwelling Unit

	Short Term (min)	Long Term (min)
EATING AND DRINKING		
Bar or Tavern	1.0 / 1,000 sq. ft.	1.0 / 5,000 sq. ft.
Restaurant, Café, Bakery	1.0 / 1,000 sq. ft.	1.0 / 5,000 sq. ft.
Formula Eating & Drinking Establishment	1.0 / 1,000 sq. ft.	1.0 / 5,000 sq. ft.
INDUSTRIAL		
Commercial Dry Cleaning & Laundry Services	n/a	n/a
Data Center	n/a	n/a
Industrial Manufacturing Facility	n/a	1.0 / 10,000 sq. ft.
Moving and/or Self Storage	n/a	n/a
Recycling Collection	n/a	n/a
Salvage Yard	n/a	n/a
Trucking and Transportation Depot	n/a	n/a
Wholesale Trade & Distribution	None	1.0 / 40,000 sq. ft.
LODGING		
Bed & Breakfast	1.0 / 20 rooms	1.0 / 10 rooms
Hotel	1.0 / 20 rooms	1.0 / 10 rooms
Short Term Rental of a Dwelling Unit	1.0 / 20 rooms	1.0 / 10 rooms
OFFICE		
Co-Working	1.0 / 20,000 sq. ft.	1.0 / 3,000 sq. ft.
General Office	1.0 / 20,000 sq. ft.	1.0 / 3,000 sq. ft.
Research and Development and/or Laboratory	1.0 / 20,000 sq. ft.	1.0 / 5,000 sq. ft.
RESIDENTIAL		
Household Living	n/a	n/a
Cottage	n/a	n/a
House	n/a	n/a
Paired House	n/a	n/a
Duplex	n/a	n/a
Triple Decker	n/a	n/a
Paired Triple	n/a	n/a
Four Plex	n/a	1.0 / DU
Six Plex	n/a	1.0 / DU
Apartment House	0.1 / DU	1.0 / DU
Apartment Building	0.1 / DU	1.0 / DU
Row Houses	0.1 / DU	1.0 / DU
Mixed-Use Building	0.1 / DU	1.0 / DU
Group Living (except as noted below)	0.05 / room	0.5 / room
Dormitory, Fraternity, or Sorority	0.1 / room	0.5 / room
RETAIL SALES		
Building/Home Supplies & Equipment	1.0 / 2,500 sq. ft.	1.0 / 10,000 sq. ft.
Consumer Goods (except as noted below)	1.0 / 2,500 sq. ft.	1.0 / 10,000 sq. ft.
Formula Retail	1.0 / 2,500 sq. ft.	1.0 / 10,000 sq. ft.
Fresh Food Market and/or Grocery Store	1.0 / 2,500 sq. ft.	1.0 / 10,000 sq. ft.
Farm/Vendor Market	n/a	n/a

‡ whichever is greater

B. MOTOR VEHICLE PARKING

1. PURPOSE

a. To ensure that off-street accessory parking for motor vehicles is provided in a manner consistent with the objectives and policies of the comprehensive master plan of the City of Somerville.
b. To establish parking policies that support transit oriented development and a walkable, human-scaled urban environment.
c. To minimize the impact of sidewalk interruptions and conflict points on the walkability of the public realm.
d. To un-bundle the cost of off-street parking from the cost of housing, so that housing in Somerville is more affordable.
e. To encourage the use of public transportation, bicycling, and walking in lieu of motor vehicle use when a choice of travel mode exists.
f. To allow flexibility in how parking is provided by allowing shared and/or off-site arrangements in order to accommodate the parking of motor vehicles in a manner that is less disruptive to the urban environment.
g. To promote the efficient use of public parking resources by achieving an 85% occupancy rate of on-street parking spaces.
h. To balance the supply of off-street parking with local thoroughfare network capacity.
i. To encourage the establishment of Parking Benefit Districts and Parking Management Associations within the city.

2. APPLICABILITY

a. This section is applicable to all real property within the City of Somerville except as follows:
    i. The minimum parking requirements of Table 7.2 do not apply to any change in use within a non-residential structure constructed before the effective date of this Ordinance, provided that the change is to a permitted use.
    ii. Non-residential uses with five-thousand (5,000) square feet of gross leasable floor area or less are exempt from the minimum parking requirements of Table 7.2.
    iii. The minimum and maximum parking standards of Table 7.2 are not applicable to real property within the Assembly Square, North Point, or Tufts University special districts.
b. For real property located in more than one municipality, accessory parking required by this section need not be located within the City of Somerville.

3. PARKING REQUIREMENTS

a. Accessory parking spaces for motor vehicles must be provided for principal uses according to Table 7.2.
    i. Transit-Oriented Areas
        a). The maximum number of accessory parking spaces allowed for real property located in an Urban ~~Square~~ TOD is specified in the first column of Table 7.2.
        b). The maximum number of accessory parking spaces allowed for real property located in a Neighborhood ~~Square~~ TOD is specified in the second column of table Table 7.2.
    ii. Non Transit-Oriented Areas
        a). The minimum number of accessory parking spaces required for real property located outside of a transit-oriented area is specified in the third column (Non-TOD Areas) of Table 7.2 Motor Vehicle Parking Standards
    iii. Accessory parking spaces provided to meet the minimum parking requirements of Table 7.2 may include the actual spaces located on a lot and the spaces located along the corresponding lot frontage where on-street parking exists on the same side of an abutting thoroughfare.
    iv. Unless otherwise specified, accessory parking for motor vehicles must be located on the same lot as the principal use that the accessory parking serves.
    v. Existing accessory parking must be maintained for the building, structure, or use which it is designed to serve, so long as the building, structure, or use exists and the parking is required by this Ordinance.
    vi. Accessory parking must be maintained exclusively for the parking of motor vehicles and not for the storage of other objects.
    vii. The use of accessory parking facilities for automobile sales, dead storage, repair, dismantling, or service of automobiles of any kind is prohibited.
    viii. There is no individual motor vehicle parking requirement for accessory uses.

4. UNDERSTANDING THE PARKING TABLE

a. Categorization System
    i. The first column of the parking table lists the same use categories, subcategories, and many of the same specific uses found in Article 5: Use Provisions.
b. Parking Requirements
    i. Parking standards for each use are identified as a ratio between one parking space and a unit of measurement applicable to the use that the parking will serve, such as the number of dwelling units, gross leasable square footage, classrooms, lodging rooms, or other unit of measurement indicated on Table 7.2. Outdoor cafe seating areas and interior floor space designed for accessory parking is never included in this calculation.
    ii. If a specific use is not listed on the table, accessory parking provided must be in accordance with the general standard for the applicable use subcategory.
    iii. Unless otherwise specified, when there is more than one principal use of real property, the parking standard is the sum of any minimum or maximum specified for each use.
    iv. When Table 7.2 requires a minimum amount of accessory parking, any fractional value of one half or greater resulting from calculation of the requirement is rounded up to the next whole number.

5. PARKING ADJUSTMENTS

a. Parking Special Permit
    i. Relief from the parking standards of Table 7.4 requires a special permit according to the provisions of §10.D.1. Special Permit.

TABLE 7.2 Motor Vehicle Parking Standards

SQ.FT. - Gross Leasable Square Footage
DU - Dwelling Unit

	Urban Square TOD (max)	Neighborhood Square TOD (max)	Non-TOD Areas (min)
ARTS & CREATIVE ENTERPRISE			
Artisan Production	1.0 / 800 sq.ft.	1.0 / 800 sq.ft.	1.0 / 1000 sq.ft.
Arts Education & Shared Workspaces	1.0 / 800 sq.ft.	1.0 / 600 sq.ft.	1.0 / 650 sq.ft.
Arts Exhibition	1.0 / 800 sq.ft.	1.0 / 800 sq.ft.	1.0 / 650 sq.ft.
Arts Sales & Services	1.0 / 200 sq.ft.	1.0 / 375 sq.ft.	1.0 / 1000 sq.ft.
Creative Studio	1.0 / 800 sq.ft.	1.0 / 600 sq.ft.	1.0 / 650 sq.ft.
Design Services	1.0 / 800 sq.ft.	1.0 / 800 sq.ft.	1.0 / 1000 sq.ft.
Work/Live Creative Studio	0.33 / DU	0.50 / DU	1.0 / DU
AUTO-ORIENTED			
Commercial Vehicle Repair & Maintenance	n/a	n/a	2.0 / garage bay
Dispatch Service (except as noted below)	n/a	n/a	1.0 / 2000 sq.ft.
Towing Service	n/a	n/a	1.0 / 2000 sq.ft.
Gasoline Station	n/a	n/a	1.0 / 500 sq.ft.
Motor Vehicle Parking (as noted below)	--	--	--
Car Share Parking	1.0 / car	1.0 / car	1.0 / car
Commercial Parking	n/a	n/a	n/a
Off-Site Accessory Parking	per Principal Use	per Principal Use	per Principal Use
Personal Vehicle Repair & Maintenance	n/a	n/a	2.0 / garage bay
Vehicle Sales	n/a	n/a	n/a
CIVIC & INSTITUTIONAL			
Community Center	1.0 / 1800 sq.ft.	1.0 / 900 sq.ft.	1.0 / 600 sq.ft.
Educational Facility	1.5 / classroom	1.5 / classroom	3.0 / classroom
Hospital	1.0 / 200 sq.ft.	1.0 / 200 sq.ft.	1.0 / 1000 sq.ft.
Library	1.0 / 800 sq.ft.	1.0 / 800 sq.ft.	1.0 / 500 sq.ft.
Minor Utility Facility	n/a	n/a	n/a
Major Utility Facility	n/a	n/a	n/a
Museum	1.0 / 800 sq.ft.	1.0 / 600 sq.ft.	1.0 / 500 sq.ft.
Private Non-Profit Club or Lodge	1.0 / 200 sq.ft.	1.0 / 150 sq.ft.	1.0 / 1000 sq.ft.
COMMERCIAL SERVICES			
Animal Services (as noted below)	--	--	--
Pet Grooming	1.0 / 500 sq.ft.	1.0 / 300 sq.ft.	1.0 / 400 sq.ft.
Pet Training, Care, or Shelter	1.0 / 500 sq.ft.	1.0 / 300 sq.ft.	1.0 / 400 sq.ft.
Veterinarian	1.0 / 500 sq.ft.	1.0 / 300 sq.ft.	1.0 / 400 sq.ft.
Assembly & Entertainment	1.0 / 6 seats	1.0 / 6 seats	1.0 / 6 seats
Banking & Financial Services (except as noted below)	1.0 / 450 sq.ft.	1.0 / 300 sq.ft.	1.0 / 400 sq.ft.
Broadcast and/or Recording Studio	1.0 / 800 sq.ft.	1.0 / 600 sq.ft.	1.0 / 600 sq.ft.
Building & Home Repair Services	1.0 / 1000 sq.ft.	1.0 / 1000 sq.ft.	1.0 / 2000 sq.ft.
Business Support Services	1.0 / 900 sq.ft.	1.0 / 900 sq.ft.	1.0 / 650 sq.ft.
Caterer/Wholesale Food Production	1.0 / 800 sq.ft.	1.0 / 600 sq.ft.	1.0 / 1000 sq.ft.
Day Care Service (as noted below)	1.0 / 900 sq.ft.	1.0 / 800 sq.ft.	1.0 / 600 sq.ft.
Maintenance & Repair of Consumer Goods	1.0 / 750 sq.ft.	1.0 / 1000 sq.ft.	1.0 / 1000 sq.ft.
Personal Services (except as noted below)	1.0 / 750 sq.ft.	1.0 / 1000 sq.ft.	1.0 / 1000 sq.ft.
Body-Art Establishment	1.0 / 750 sq.ft.	1.0 / 1000 sq.ft.	1.0 / 1000 sq.ft.

TABLE 7.2 Motor Vehicle Parking Standards

SQ.FT. - Gross Leasable Square Footage DU - Dwelling Unit	Urban Square TOD (max)	Neighborhood Square TOD (max)	Non-TOD Areas (min)
COMMERCIAL SERVICES (CONT.)			
Gym or Health Club	1.0 / 200 sq.ft.	1.0 / 200 sq.ft.	1.0 / 500 sq.ft.
Funeral Home			
Health Care Provider	1.0 / 500 sq.ft.	1.0 / 300 sq.ft.	1.0 / 300 sq.ft.
EATING AND DRINKING			
Bar or Tavern	1.0 / 300 sq.ft.	1.0 / 100 sq.ft.	1.0 / 500 sq.ft.
Restaurant, Café, Bakery	1.0 / 300 sq.ft.	1.0 / 100 sq.ft.	1.0 / 500 sq.ft.
Formula Eating & Drinking Establishment	1.0 / 300 sq.ft.	1.0 / 100 sq.ft.	1.0 / 500 sq.ft.
INDUSTRIAL			
Commercial Dry Cleaning & Laundry Services	n/a	n/a	1.0 / 1200 sq.ft.
Data Center	n/a	n/a	1.0 / 1200 sq.ft.
Industrial Manufacturing Facility	n/a	n/a	1.0 / 800 sq.ft.
Moving and/or Self Storage	n/a	n/a	1.0 / 1200 sq.ft.
Recycling Collection	n/a	n/a	1.0 / 1200 sq.ft.
Salvage Yard	n/a	n/a	1.0 / 1200 sq.ft.
Trucking and Transportation Depot	n/a	n/a	1.0 / 1200 sq.ft.
Wholesale Trade & Distribution	n/a	n/a	1.0 / 1200 sq.ft.
LODGING			
Bed & Breakfast	1.0 / DU + 1.0 / 4 guest rooms	1.0 / DU + 1.0 / 4 guest rooms	1.0 / DU + 1.0 / 4 guest rooms
Hotel	1.0 / 2 guest rooms	1.0 / 2 guest rooms	1.0 / 2 guest rooms
Short Term Rental of a Dwelling Unit	1.0	1.0	1.0
OFFICE			
Co-Working	1.0 / 1200 sq.ft.	1.0 / 1200 sq.ft.	1.0 / 800 sq.ft.
General Office	1.0 / 900 sq.ft.	1.0 / 900 sq.ft.	1.0 / 650 sq.ft.
Research and Development and/or Laboratory	1.0 / 1000 sq.ft.	1.0 / 1000 sq.ft.	1.0 / 1000 sq.ft.
RESIDENTIAL			
Household Living	1.0 / DU	1.0 / DU	1.0 / DU
Group Living (except as noted below)	--	--	--
Community or Group Residence	1.0 / DU	1.0 / DU	1.0 / DU
Dormitory, Fraternity, or Sorority	0.5 / bed	0.5 / bed	1.0 / 4 beds
Homeless Shelter	4.0	4.0	4.0
Nursing Home/Assisted Living Facility	1.0 / 10 beds	1.0 / 6 beds	1.0 / 6 beds
Single Room Occupancy Housing	1.0 / 6 beds	1.0 / 4 beds	1.0 / 4 beds
RETAIL SALES			
Building/Home Supplies & Equipment	1.0 / 1000 sq.ft.	1.0 / 1000 sq.ft.	1.0 / 1000 sq.ft.
Consumer Goods (except as noted below)	1.0 / 1500 sq.ft.	1.0 / 1000 sq.ft.	1.0 / 750 sq.ft.
Medical Marijuana	1.0 / 1000 sq.ft.	1.0 / 750 sq.ft.	1.0 / 500 sq.ft.
Formula Retail	1.0 / 1500 sq.ft.	1.0 / 1000 sq.ft.	1.0 / 750 sq.ft.
Fresh Food Market and/or Grocery Store	1.0 / 500 sq.ft.	1.0 / 300 sq.ft.	1.0 / 1500 sq.ft.
Farm/Vendor Market	n/a	n/a	1.0 / 1500 sq.ft.

ii. In its discretion to approve or deny a special permit authorizing relief from the parking standards of Table X., the review board shall consider the following:
a). The supply and demand of on-street parking in the neighborhood, as determined through a parking study.
b). Mobility management programs and services provided by the applicant to reduce the demand for parking.
c). That parking provided in excess of any maximum permitted does not result in the increase in impervious lot area.

b. Reductions
i. Minimum parking requirements of Table 7.2 may be adjusted according to Table 7.3.

TABLE 7.3 Reductions to Required Minimum Parking

	Multiplier
Affordable Dwelling Unit	0.75
Senior Housing	0.50
Housing for the Disabled	0.33

6. OFF-SITE ACCESSORY PARKING

a. Required accessory parking may be provided off-site, except for any required handicapped parking, as permitted according to the provisions of and when conforming to the following:
i. In the NR and UR districts, the lot featuring the off-site accessory parking must be contiguous and under the same ownership as the lot containing the principal use served..
ii. In all other zoning districts, a lot featuring the off-site accessory parking must be located within six hundred and sixty (660) feet in walking distance, measured from the nearest point of the off-site parking along block faces and walkways to the principal entrance of the use served;
iii. Pedestrian access between the use and the off-site accessory parking area must be via paved sidewalk or walkways; and
iv. A lease, recorded covenant, or other comparable legal instrument, executed and filed with the Registry of Deeds, guaranteeing long term use of the site is provided to the review board or building official.

7. STANDARDS FOR ALL OFF-STREET PARKING

a. Approval by the City Engineer Required
i. All curb cuts, driveways, parking spaces, and parking lots must comply with the applicable provisions of Chapter 11, Article II, Sec. 11-33 Driveway Construction of The Code of Ordinances, City of Somerville, Massachusetts.

b. Permitted Types
i. Off-street parking may be provided as space(s) in a driveway, a parking lot, a private garage or carport, an above-ground parking structure, or an underground parking structure. Zoning districts include restrictions on the type of off-street parking that is permitted in each district. See Article 2: Base Districts, and Article 4: Special Districts for more information.

c. Parking Setbacks
i. All off-street parking, including surface and structured parking, but excluding underground parking, must be located at or behind the required parking setback as indicated for each building type. See Article 2: Base Districts for more information.
ii. Parking is never permitted within a frontage.

d. Access
i. All off-street parking must have direct access to a public thoroughfare from an alley, driveway, maneuvering aisle, or permanent access easement.
ii. If an improved alley with a right-of-way of at least eighteen (18) feet is provided, all off-street parking must be accessed from the alley.

e. Circulation
i. Parking lots and structures must be designed so that vehicles enter or exit the lot or structure onto a public thoroughfare in a forward direction rather than backing out into the roadway.
ii. Ingress and egress from individual parking spaces must be from a drive aisle or driveway. Vehicles are not permitted to enter or exit parking spaces directly from a public thoroughfare except as follows:
a). Parking lots with six (6) or less parking spaces may be designed to permit motor vehicles to enter or exit a parking space directly from a rear alley by special permit.
i). In its discretion to approve or deny a special permit authorizing parking spaces that are directly accessible from a rear alley, the review board shall consider the following:
a. Adequate alley width and surface material to accommodate vehicular turning movements.
b. Location of alley intersections in relation to the safety of pedestrians, bicyclists, and motor vehicles.
c. Sight lines needed by the driver of any vehicle entering or exiting the site.

f. Parking Space & Drive Aisle Dimensions
i. All parking spaces and drive aisles must comply with the minimum dimensional standards shown in Table 7.4, with the following exceptions:
a). Motorcycle and scooter parking stalls must measure at least four feet in width and eight feet in depth.
b). Mechanical access parking is exempt from parking stall and drive aisle dimensional requirements.
c). When twenty (20) or more spaces is required by Table 7.2, up to twenty percent (20%) of those spaces may be designed as parking for compact cars with the minimum stall length reduced to sixteen (16) feet and minimum stall width reduced to seven and one half (7.5) feet. Compact spaces must be clearly identified with a pavement marking and signage.
d). When the side of a parking space abuts a wall

TABLE 7.4 Parking Space & Aisle Dimensions

	Parallel	45 Degrees	60 Degrees	90 Degrees
Stall Width (min)	8 feet	9 feet	9 feet	9 feet
Stall Length (min)	18 feet	18 feet	18 feet	18 feet
Drive Aisle, 1 Way (min)	12 feet	12 feet	14 feet	n/a
Drive Aisle, 2 Way (min)	20 feet	n/a	n/a	22 feet
Vertical Clearance	7'6" (min)	7'6" (min)	7'6" (min)	7'6" (min)

or other obstruction that is taller than six (6) inches, the width of the parking space must be increased by one foot.

g. Accessibility
   i. All ~~accessory~~ parking spaces, lots, and structures must comply with relevant State and Federal regulations for parking designed for persons with disabilities, including 521 CMR 300.

h. Lighting
   i. All off-street parking must be provided with adequate light for use at night in accordance with the provisions of §6.H. Outdoor Lighting.

i. Signage
   i. All traffic control signs must be installed in accordance with the Manual of Uniform Traffic Control Devices (MUTCD).

8. PARKING LOTS

a. Access
   i. Pedestrian access from parking lots must lead directly to a public sidewalk (i.e., not directly into a building).

b. Design & Construction
   i. No surface parking lot may have a grade in excess of ten percent (10%).
   ii. Individual parking spaces must be delineated with paint or similar method and maintained in clear, visible condition to identify the parking spaces from drive aisles and other circulation features.
   iii. Wheel stops, bumper guards, or other alternatives must be installed to prevent vehicles from damaging or encroaching upon any sidewalk, landscaping, fence, wall, or structure and must be properly anchored and secured into the ground.
   iv. Parking lots abutting, within fifty (50) feet, or visible from the right-of-way of a public thoroughfare, except an alley, must be effectively screened by a perimeter wall or fence.
      a). Perimeter walls and fences must be no more than four (4) feet in height measured from the surface of the lot, no less than fifty percent (50%) opaque, and designed to allow surveillance over and beyond the wall or fence by pedestrians approaching or passing the parking lot.

c. Capacity
   i. Unless otherwise specified, the actual parking of motor vehicles in excess of the number of parking spaces delineated in a parking lot is prohibited.

9. STRUCTURED PARKING

a. Access
   i. Pedestrian access to structured parking must lead directly to a public sidewalk (i.e., not directly into a building), except underground levels which may be exited by pedestrians directly into a building.

b. Design & Construction
   i. Unless setback by space designed for occupancy by non-parking uses, the facade of any story of a building occupied by motor vehicle parking must be designed as follows:
      a). Fenestration and facade openings must be vertically and horizontally aligned and all floors fronting on the facade must be level (not inclined).
      b). The facade must include windows of transparent or translucent, but non-reflective, glass or openings designed to appear as windows for between twenty percent (20%) and fifty percent (50%) of the wall area of each floor.
      c). Windows must be back-lit during evening hours and internal light sources must be concealed from view from public sidewalks.
      d). The facade area masking the floors occupied by motor vehicle parking must be seamlessly integrated into the architectural design of the building's facade.

10. CURB CUTS

a. Restrictions
   i. Unless otherwise specified, one (1) curb cuts is permitted per front lot line.
   ii. The location of curb cuts are restricted for lots abutting a block face designated on the Pedestrian streets map. See Article 8: Public Realm Standards for more information.
   iii. Curb cuts must be located to minimize conflict with pedestrians, bicyclists, and motor vehicles on the thoroughfare they provide access to and from.

b. Design & Construction
   i. Curb cuts must be designed in accordance with the provisions of §8.D.3. Streets.

11. DRIVEWAYS & VEHICULAR ENTRANCES

a. Neighborhood Compatibility
   i. Driveways and vehicular entrances providing access to off-street parking with seven (7) or more parking spaces are prohibited within fifty (50) feet of any property within the Neighborhood Residence district, measured from the edge of the driveway or vehicular entrance along the front lot line(s) block face to the nearest property line.

b. Design & Construction
   i. Driveways may be located within required front, side, and rear setback areas, but are prohibited between the facade of a building and any front lot line.
   ii. Driveways and vehicular entrances to off-street parking with six (6) or less parking spaces must be between eight (8) feet and twelve (12) feet in width.
   iii. Driveways and vehicular entrances to off-street parking with seven (7) or more parking spaces must be between eighteen (18) and twenty four (24) feet in width at the frontage.

c. Shared Driveways
   i. Driveways may provide access in whole or in part on or across an abutting lot(s), provided that an access easement exists between all property owners.

12. FLEXIBLE USE OF ACCESSORY PARKING

a. When existing accessory parking spaces are not needed to meet the parking demand of a principal use (such as when the principal use is closed for business), the property owner may make the unused or under-utilized parking spaces available for other uses, including commercial parking, when permitted in the district where the lot is located.

C. SERVICE ACCESS

1. LOADING FACILITIES

a. General
   i. Buildings providing space for uses that regularly receive or distribute large quantities of goods must provide loading facilities as required by the Director of Traffic and Parking. Loading facilities must be of sufficient quantity to adequately serve the intended use(s).
   ii. The Director of Traffic and Parking may authorize the use of an alley for loading activities in lieu of requiring a separate on-site loading facility.
   iii. Loading and unloading activities are not permitted within a public thoroughfare except in a loading zone during permitted hours designated by the Director of Traffic and Parking.

b. Design & Construction
   i. Loading facilities, including all docks and areas used for the storing and staging of materials being transported to or from the site, must be fully enclosed within a building or located to the side or rear of buildings and screened from view from any public thoroughfare (excluding alleys) or civic space according to §6.F. Screening.
   ii. Common loading facilities may be shared by two or more buildings or multiple uses within the same building with the approval of the Director of Traffic and Parking.

c. Neighborhood Compatibility
   i. Loading and unloading activities may not encroach on or interfere with the use of sidewalks, drive aisles, or parking areas, or public thoroughfares. Maneuvering aisles and driveways may serve both required parking and loading bays if they meet the design needs of each activity. Loading facilities requiring vehicles to back in from a public thoroughfare are permitted.
   ii. Loading and unloading activities for lots abutting the NR or UR districts are limited to the hours of the day between 7:00 a.m. and 10:00 p.m. All loading docks on these lots must be signed to indicate "no idling".

2. SERVICE AREAS

a. General
   i. Trash collection, trash compaction, recycling collection and other similar service areas must be fully enclosed within a building or located to the side or rear of the buildings and be effectively screened from view from any public thoroughfare (excluding alleys), civic space, or abutting properties in the NR or UR zoning districts according to §6.F. Screening.

D. MOBILITY MANAGEMENT

1. PURPOSE

a. To improve transportation options available to travelers, promote the use of efficient travel modes, and reduce the need to travel.
b. To decrease vehicular air pollutant emissions, conserve energy resources, and reduce ambient noise levels by reducing vehicular trips, total vehicle miles traveled, and traffic congestion within the city.
c. To reduce automobile dependence and the associated costs of owning, operating, and maintaining a motor vehicle.
d. To decrease costs associated with the construction, repair, maintenance, and improvement of city thoroughfares and parking facilities.
e. To decrease the cost of traffic enforcement and promote traffic safety.
f. To reduce the demand for parking facilities and increase the capacity and efficiency of existing transportation infrastructure.
g. To support a fiscal return on federal, state, and local financial investment made in public transportation infrastructure by increasing ridership of public transportation services.
h. To incorporate transportation planning considerations into development review.
i. To encourage the establishment of Mobility Management Associations (MMA's) within the city.

2. APPLICABILITY

a. This section is applicable to the following:
   i. all non-residential development greater than twenty thousand (20,000) gross square feet in total floor area;
   ii. all non-residential uses, including the City of Somerville, that have a permanent place of business within the city and twenty (20) or more employees or students;
   iii. all multi-tenant buildings with non-residential uses that in combination have over twenty (20) employees or students in total;
   iv. all residential development of more than twenty (20) dwelling units;
   v. any alteration, expansion, reconstruction, extension, or structural change to an existing commercial parking facility that causes an increase in the number of parking spaces; and
   vi. the change in use of a parking facility from accessory parking to commercial parking.

3. VOLUNTARY PARTICIPATION

a. Uses and property owners not subject to the provisions of this Section are encouraged to implement mobility management programs and services voluntarily.

4. MOBILITY MANAGEMENT PLAN

a. Prior to the issuance of any zoning permit, special permit, building permit, certificate of occupancy, business license, or other permit, a mobility management plan must be approved by the Building Official.
b. The mobility management plan must identify existing site based parking and travel conditions, proposed mobility management programs & services, implementation schedule, and targets and benchmarks for performance review.
c. The mobility management plan should be consistent with and contribute to the achievement of the comprehensive master plan of the City of Somerville in accordance with the purpose of this section.

5. PERFORMANCE REVIEW

a. Property owners and employers must submit an annual report to validate continued compliance with the provisions of this section.
b. A statistically valid survey of employees and/or residents is required to ascertain the level of success of implemented programs, services, incentives, and other measures in accordance with the purpose of this section. The costs associated with any survey shall be borne by the business or property owner.

6. MOBILITY MANAGEMENT ASSOCIATIONS

a. Mobility Management Associations are organizations formed to help individual uses and property owners collectively implement and administer the programs and/or services required by this Section.
b. A representative from an approved Mobility Management Association may jointly represent uses and/or property owners subject to the provisions of this Section in place of a required on-site transportation coordinator.

7. REQUIRED PROGRAMS & SERVICES

a. The following programs and/or services are required for all non-residential uses:
   i. Annual Mobility Education Meeting
   ii. Distributed Information
   iii. Guaranteed Ride Home Program
   iv. On-Site Transportation Coordinator
   v. Posted Information
   vi. Preferential Parking Locations for Carpool/Vanpool
   vii. Qualified Transportation Fringe Benefits
b. The following programs and/or services are required for all residential uses:
   i. Distributed Information
   ii. Posted Information
   iii. Unbundled Parking
c. The following programs and/or services are required for commercial parking facilities:
   i. Posted Information

8. STANDARDS FOR PROGRAMS & SERVICES

a. Transportation management plans may include, but are not limited to, any or all of the following:
   i. Financial Incentives
      a). Car-Sharing/Bike-Sharing Memberships: Full or partial employer-funded monthly membership for local car-sharing and/or bike-sharing services.
      b). Parking Cash-Out Program: An employer-funded cash payment made available to employees who choose not to use a parking space in an

employer subsidized parking lot or facility.

c). Qualified Transportation Fringe Benefits: A "Commuter Tax Benefit" that allows employers to save on payroll related taxes or employees to save on federal income taxes according to Section 132(f) of the Internal Revenue Code through the provision of either Pre-Tax Payroll Deductions for Transit Passes/ Vanpool Costs or Subsidized Transit Passes.

ii. Shared Vehicle Services

a). Bikes at Work: Bicycles available on-site during the workday for employee business and personal use.

b). Bike Share Station: Bike sharing vehicles available on-site for public use.

c). Car Share Vehicle(s): On-site parking spaces provided at no cost for car-sharing vehicles.

d). Fleet Vehicle(s): Company fleet vehicle(s) available on-site during the workday for employees that carpool, vanpool, bike, walk, or take transit.

e). Guaranteed Ride Home Program: An employer subsidized ride home for employees that carpool, vanpool, bike, walk, or take transit.

i). Transportation must be provided to an employee for:

a. Emergency situations of the employee or a family member;

b. Illness of the employee or a family member;

c. Unscheduled overtime; and

d. Bicycle damage.

ii). Availability of service may be restricted to no less than four (4) times per calendar year.

f). Ride Matching Services: A no cost service to help employees interested in carpooling locate other interested carpoolers with similar schedules, routes, and destinations.

g). Shuttle Services: Smaller buses or vans providing transportation for employees between places of work and/or transit stations.

h). Visitor Commute Support: Full or partially funded daily transit passes or daily memberships for local car-sharing and/or bike-sharing services.

iii. Alternative Schedules

a). Flexible Work Hours: Compressed workweeks, flexible work hours, and/or staggered work shifts.

b). Teleworking: Policies to permit and encourage employees to work from home or off-site.

iv. Marketing & Education

a). Bike Commuting Training: Classes (education and hands-on training) to encourage employee bike commuting offered on-site or through a 3rd party provider.

b). Distributed Information: Printed materials issued annually to all tenants and employees, and to new employees and/or tenants at the time of hire or occupancy, providing the following information:

i). Current maps identifying station locations, routes, and schedules for public transit serving the site;

ii). Bicycle route and facility information, including regional/local bicycle maps;

iii). A listing of facilities available for carpoolers, vanpoolers, bicyclists, transit riders and pedestrians at the site.

c). On-Site Transportation Coordinator: a person with the responsibility to implement and administer the programs and/or services of an approved Mobility Management Plan and serve as a point of contact to the City of Somerville.

d). Posted Information: A bulletin board, display case, or kiosk located in a building lobby, common area, and/or other conspicuous location displaying the following information:

i). Current maps identifying station locations, routes, and schedules for public transit serving the site;

ii). Bicycle route and facility information, including regional/local bicycle maps;

iii). A listing of facilities available for carpoolers, vanpoolers, bicyclists, transit riders and pedestrians at the site.

e). Transportation Signage: Wayfinding providing directions to and clearly identifying transportation facilities such as transit stations, bus stops, bicycle parking, carpool spaces, etc.

v. Parking Management

a). Charging for Employee Parking: Elimination of existing subsidies for off-site employee parking and/or charging for on-site employee parking.

b). Demand-Responsive Pricing: Adjustable hourly rates charged for employee or customer parking to manage parking availability.

c). Parking Lease Adjustments: Rental of parking spaces on a monthly rather than yearly basis.

d). Preferential Parking for Carpool/Vanpool: Parking spaces located in a preferential location and reserved for registered carpool and vanpool vehicles.

e). Shared Parking: Parking spaces shared by two (2) or more uses when the peak needs of each use occurs at different times.

f). Unbundled Parking: Parking spaces rented, leased, or sold as an option rather than a requirement of the rental, lease, or purchase of a dwelling unit or non-residential floor space.

vi. On-Site Services

a). Bicycle Repair Station: On-site bike repair station or room available for residents or employees.

b). Child Care: The caring for and supervision of children available on site for employees.

c). Concierge Services: an employee of an apartment building, hotel or office building providing services to residents or employees.

d). On-Site Transit Pass Sales: Retail sales of public transportation passes.

b. Programs and services not listed may be proposed as part of any mobility management plan.

9. ENFORCEMENT

a. In accordance with §10.G.1.c. Fines and Penalties, each employee or resident shall be considered a separate offense for development not in compliance with the provisions of this section.

ARTICLE 8: PUBLIC REALM STANDARDS

GENERAL 231
Purpose 231

URBAN DESIGN 231
Land Subdivision 231
Land Parcelization 231
Thoroughfare network 231
Blocks 231
Alley Access 232
Lots 232

CIVIC & RECREATION SPACES 234
Development Review 234
Standards for All Civic Spaces 234
Regional Park 235
Community Park 236
Neighborhood Park 237
Pocket Park 238
Recreation Fields 239
Public Common 240
Public Square 241
Plaza 242
Playground 243
Dog Park 244
Landmark 245
Community Garden 246

THOROUGHFARES 247
Development review 247
Standards for all Thoroughfares 247
Streets 247
Commercial Alley 249
Residential Alley 249
Mid-Block Passages 249

PEDESTRIAN STREETS 250
Intent 250
Administration 250
Applicability 250
Standards 250

A. GENERAL

1. PURPOSE

a. To ensure that the limited land area of Somerville is efficiently divided into a block and lot pattern consistent with the objectives and policies of the comprehensive master plan of the City of Somerville.
b. To ensure the development of a well-connected thoroughfare network, composed of direct & convenient routes that reinforce Somerville as a walkable, human-scaled urban environment.
c. To protect the social, environmental, and economic benefits provided by a walkable development pattern.
d. To prohibit one-way thoroughfares and infrequent intersections that limit connectivity, discourage walking, induce traffic congestion, and increase vehicular air pollutant emissions by reducing the number of possible routes of travel and add unnecessary distance between destinations.
e. To require alley loaded blocks that concentrate "back-of-house" elements such as utility infrastructure, refuse collection, and access to parking & loading in the block interior, to the rear of buildings.
f. To require the platting of land so that lots have frontage upon and buildings are properly oriented toward the public realm of an abutting thoroughfare.
g. To ensure pedestrian safety and comfort, promote economic vitality, and preserve and enhance the character of the public realm along designated pedestrian streets.
h. To develop a comprehensive network of thoroughfares that accommodate multiple modes of transportation, organized in a hierarchy defined by the character of each type.
i. To ensure a variety of functional, well-designed civic and recreation spaces that complement the character of adjacent properties, contribute to a comprehensive open space network, and add vibrancy to the city.

B. URBAN DESIGN

1. LAND SUBDIVISION

a. Unless otherwise specified, development sites over four (4) acres in land area must be subdivided with THOROUGHFARES to create BLOCKS conforming to §8.B.4. Blocks and platted with LOTS according to §8.B.6. Lots.
b. Access for motor vehicles, loading, and service to new BLOCKS and individual LOTS must be from an ALLEY. The configuration of ALLEYS internal to a BLOCK must conform to §8.B.5. Alley Access.
c. The subdivision of land requires Subdivision Plan Approval. See §10.C.8. Subdivision Plan Approval for more information.
d. The construction or reconstruction of THOROUGHFARES requires Site Development Plan Approval as a prerequisite to the issuance of a zoning permit. See §10.C.5. Site Development Plan Approval for more information.

2. LAND PARCELIZATION

a. Lot splits, lot mergers, and lot line adjustments are subject to the provisions of §8.B.6. Lots and require only a Zoning Permit. See §10.C.1. Zoning Permit for more information.

3. THOROUGHFARE NETWORK

a. The general location and width of all proposed THOROUGHFARES must conform with official maps and exiting policy plans of the City of Somerville.
b. All THOROUGHFARES must intersect with other THOROUGHFARES, forming a network. This provision shall not be construed as prohibiting the termination of a thoroughfare at a "T" intersection, provided that the overall connectivity of the thoroughfare network is maintained and intersections are adequately spaced subject to the approval by the City Engineer.
c. To every extent possible, proposed THOROUGHFARES should align to those on adjacent sites to provide for the continuation of thoroughfares from adjoining areas.
d. Cul-de-sacs and other dead-end THOROUGHFARES are prohibited unless granted an waiver from the intersection requirement of §8.B.3.b on a case-by-case basis to accommodate specific site conditions in accordance with the provisions of §10.D.2. Urban Design Waiver.
e. THOROUGHFARES must be permanently open and provide public access as part of an overall connected THOROUGHFARE network.

4. BLOCKS

a. Unless otherwise specified, BLOCKS must have individual BLOCK FACES no greater than five-hundred (500) feet and a total perimeter no greater than sixteen-hundred (1,600) feet.
b. BLOCK FACES are measured as the aggregate of all FRONT LOT LINES and the width of ALLEYS, if present, on one side of a BLOCK.
c. BLOCK perimeter is measured as the aggregate of all BLOCK FACE lengths of an individual BLOCK.
d. BLOCKS should be rectangular in shape, but are expected to respond to natural features.
e. Portions of DEVELOPMENT SITES abutting areas abutting undeveloped land, areas unsuitable for development,

pre-existing incomplete blocks, or rail rights-of-way may be granted an urban design waiver from the BLOCK size requirements in accordance with the provisions of §10.D.2. Urban Design Waiver.

f. Block dimensions may be calculated at a reduced block face or perimeter length where a mid-block passage connecting opposite sides of a block is installed as a dedicated right-of-way or reserved with a permanent access easement.

5. ALLEY ACCESS

a. Blocks may be accessed by alleys in one of the configurations defined below and illustrated in Figure X. Alley Access:
   i. Common Block: A block where parking and service areas are shared among several buildings and, in some cases, LOTS.
   ii. "H" - Block: A block with three alleys that intersect to form an "H", allowing development to front on four block faces.
   iii. "T" - Block: A block with two perpendicular alleys that intersect to form a "T", allowing development to front on three BLOCK FACES.

b. To every extent possible, ALLEY access into BLOCKS should be aligned on opposite BLOCK FACES as well as with ALLEYS on opposite sides the street.

6. LOTS

a. All LOTS must have a lot line abutting a THOROUGHFARE or CIVIC SPACE.

b. LOTS must have a LOT WIDTH appropriate for one or more building type(s) permitted for the district where the LOT is located.

c. Unless otherwise specified, LOTS may be platted to create a CORNER, INTERIOR, or KEY LOT. FLAG LOTS and THROUGH LOTS are prohibited.

d. To avoid creating irregular shapes, LOTS must be platted so that their side LOT LINES are perpendicular to the FRONT LOT LINE or to the tangent of a curved FRONT LOT LINE.

GRAPHIC STILL IN PRODUCTION
Alley Access Illustration

C. CIVIC & RECREATION SPACES

1. DEVELOPMENT REVIEW

a. Preliminary Review
   i. Development of a civic space requires a neighborhood meeting prior the submittal of an application for development review. See §10.B.2. Neighborhood Meeting for more information.
   ii. Development of a civic space requires review by the Urban Design Commission prior the submittal of an application for development review. See §10.B.3. Design Review for more information.

b. Administrative Review
   i. The development of a civic space requires Site Development Plan Approval as a prerequisite to the issuance of a zoning permit. See §10.C.5. Site Development Plan Approval for more information.

2. STANDARDS FOR ALL CIVIC SPACES

a. Design & Construction
   i. Civic & recreation spaces must be engineered and constructed as required by the City Engineer and the Director of Transportation & Infrastructure.

b. Accessibility
   i. The design of all civic & recreation spaces must comply with all applicable ADA Standards for Accessible Design, as amended.

c. Access & Circulation
   i. Entrances must be physically and visually accessible from surrounding sites, designed to make visitors feel welcome and comfortable entering the space, and oriented to preserve view corridors and enhance visual connections to surrounding properties or activities.
   ii. Entrances adjacent to children's activity areas must be gated.

d. Landscape
   i. All landscaping within civic & recreation spaces must comply with the provisions of §6.D.2. Landscape Design, §6.D.3. Landscape Installation, and §6.D.4. Landscape Maintenance.
   ii. Trees
      a). Large trees are required as indicated for each type of civic & recreation space.
      b). At least one thousand (1,000) cubic feet of SOIL VOLUME must be provided for each tree within a twenty seven (27) foot radius of the tree trunk.
         i). Where soil volumes within the maximum allowable radii for adjacent trees overlap, up to twenty-five percent (25%) of the required soil volume per tree may be shared between trees.
         ii). Soil volume provided under paved surfaces must be provided through SUSPENDED PAVEMENTS or STRUCTURAL CELLS. SAND-BASED STRUCTURAL SOIL SYSTEM (SBSS) may be used with approval of the Director of Transportation & Infrastructure.
      c). A minimum sixteen (16) square foot open soil area must be provided around each tree, centered at the tree trunk.
      d). A TREE GRATE or MULCH at a minimum of three (3) inches in depth must be applied to or over the open soil area, as appropriate.

e. Hardscape
   i. Surface materials must be approved by the Director of Transportation & Infrastructure.

f. Amenities and Furnishings
   i. All amenities and public furniture must comply with the City of Somerville's Park Specifications Handbook. The Director of Transportation & Infrastructure may authorize the use of amenities and furnishings that are proportional or better in quality and function to those identified in the Park Specifications Handbook, excluding dedication plaques and signage.
   ii. Seating
      a). Seating is required as indicated for each type of civic & recreation space. The provision of seating in excess of this requirement is encouraged.
      b). Seating must be designed for the convenience and comfort of visitors, located in support of gathering spaces and along pedestrian paths, but should be out of the flow of pedestrian traffic.
      c). When required to provide seating, civic & recreation spaces should offer a variety of seating types and seating locations including places to sit in the sun, in the shade, out of the wind, in groups, alone, close to activity, and in relative seclusion to every extent possible.
      d). Linear feet of seating may be provided through movable chairs, fixed individual seats, fixed benches with or without backs, seat walls, planter and fountain ledges, and/or seating steps.
      e). Seat walls, planter and fountain ledges, and/or seating steps shall not, in aggregate, represent more than 15 percent of the linear feet of required seating.
      f). All seating must have a minimum seat depth of 18 inches and a seat height between 16 and 30 inches above grade (adjacent walking surfaces).
      g). Seating 30 inches or more in depth is counted as double the linear feet, provided there is access to both sides.
      h). Planter or fountain ledges provided as seating must have a minimum depth of 22 inches.
      i). Seat backs must be a minimum of 14 inches high and either contoured in form for comfort or reclined between 10 to 15 degrees from vertical. Walls located adjacent to a seating surface do not count as seat backs.
      j). Movable chairs are not permitted to be chained, fixed, or otherwise secured while a civic space is open to the public, however may be chained or removed during the hours of 9:00pm to 7:00am.
      k). Steps provided for pedestrian circulation and the seating of open air café areas do not count toward seating requirements.
      l). Deterrents to seating, such as spikes, rails, or deliberately uncomfortable materials or shapes,

placed on surfaces that would otherwise be suitable for seating are prohibited.

m). Deterrents to skateboards, rollerblades and other wheeled devices are permitted on seating surfaces if they do not inhibit seating, maintain a minimum distance of five feet between deterrents, and are integrated into the seating surface at the time of manufacture or construction.

iii. Tables

a). All civic & recreation spaces requiring tables must include a minimum of one handicapped accessible table.

iv. Bicycle Parking

a). Bicycle parking must be provided as required by Director of Transportation & Infrastructure and is subject to provisions of §7.A.4. Short-Term Bicycle Parking.

v. Signage

a). Permanent signage must be provided as appropriate for each type of civic & recreation space.

b). Signage should be located at entrances and at significant locations to provide direction and information for visitors and residents.

vi. Litter Receptacles

a). Litter receptacles must be designed in such a manner that users do not have to touch the receptacle or push open a door in order to dispose of litter.

b). Litter receptacles must be constructed of durable materials that are graffiti-, fire-, rust, and stain-resistant.

c). Litter receptacles must include a metal barrier to prevent rodents from entering from the bottom.

d). Litter receptacles should be located near entrances to civic spaces and within reasonable proximity to seating areas.

e). Recycling receptacles are required in conjunction with litter receptacles.

g. Lighting

i. Lighting that promotes personal safety and invites pedestrian activity while adding visual ambiance and character to civic and recreation spaces at night must be provided.

ii. Lighting fixtures should be smaller-scale, frequently placed, and scaled to pedestrians. Fixture components (base, pole, luminaries) should have stylistic compatibility, while varying in form according to functional requirements. The indiscriminate use of bright lighting should be limited.

h. Irrigation & Drainage

i. All irrigation systems must be designed to use a minimal amount of water.

ii. Drainage systems must be designed to return drain water to the soil. All water holding and infiltration facilities must be designed to meet the specific needs of each type of civic & recreation space.

i. Accessory Structures

i. Accessory structures common to civic spaces, including but not limited to, restrooms, open-air pavilions, gazebos, picnic shelters, outdoor theaters/ performance stages, field houses, and their substantial equivalents are permitted.

3. REGIONAL PARK

A civic space type designed for active and passive recreation with features and facilities that have a regional draw. Examples include: Alewife Brook Reservation, Dilboy Field, and Foss Park

GRAPHIC STILL IN PRODUCTION

DIMENSIONS	
Size (min/max)	10 acres

FURNISHINGS	
Seating (min)	n/a
Tables (min)	n/a

LANDSCAPE	
Trees (min)	1/200 sq. ft.
Permeable Surface (min)	85%
Landscape (min)	70%

a. Development Standards
   i. A regional park must include a well-connected network of paths that effectively accommodates a variety of travel modes, including walking, bicycling, and provisions to access by maintenance vehicles.
   ii. One (1) highly-visible and distinct entryway, entrance marker, or gateway is required on each side of a regional park.
   iii. Regional parks must provide for a variety of large and small group activities, as well as smaller passive recreation areas for individual and small group gatherings.
   iv. Regional parks must provide permanent restroom facilities open to the public.
   v. A minimum of one (1) combination compactable litter/recycling receptacle is required for every ten thousand (10,000) square feet of plaza area.
   vi. Utility structures including on-site storm water management devices must be located in areas not intended for recreational use by visitors.
   vii. Wetland and riparian areas must be protected by a 50-foot native vegetation buffer allowing access for interpretive and educational features.

b. Design Guidelines
   i. Accessory structures should stylistically reflect the site furnishings and be constructed of quality materials that can withstand heavy use.
   ii. Passive spaces should be separate from active recreation areas, and accessible to all users.
   iii. Park features should allow for a diverse group of users to participate in various recreation activities simultaneously.
   iv. Pathways should create anticipation and visual interest by framing views and directing attention to landscape features.
   v. Regional parks should provide deliberate focal points along all park routes and at all park destinations.
   vi. Trees should be used in an informal manner to spatially define primary user spaces and to frame views sheds.

4. COMMUNITY PARK

A civic space type designed for active and passive recreation with features and facilities that support the community as a whole. Examples include: Hodgkins-Curtin Park, Conway Park, and Prospect Hill Park

GRAPHIC STILL IN PRODUCTION

DIMENSIONS		
Size (min/max)	2 acres	10 acres

FURNISHINGS	
Seating (min)	n/a
Tables (min)	n/a

LANDSCAPE	
Trees (min)	1/200 sq. ft.
Permeable Surface (min)	85%
Landscape (min)	60%

a. Development Standards
   i. A Community Park must provide varied spaces that accommodate a wide range of ages, physical abilities and programming.
   ii. A Community Park must have multiple entrance points to encourage access from the surrounding neighborhood and from public transportation routes.
   iii. Trees must be planted to provide shade during summer months, especially in seating areas and playgrounds.
   iv. A minimum of one (1) combination compactable litter/recycling receptacle is required for every ten thousand (10,000) square feet of plaza area.

b. Design Guidelines
   i. Approximately two-thirds of a community park should be reserved for active recreation uses such as: playgrounds, sports fields or courts, areas for free play or physical fitness or activities.
   ii. Varied play environments that foster the development of children's cognitive, physical and social development are encouraged.
   iii. Water features and changes in topography are encouraged.
   iv. Amenities and furnishings include, but are not limited to: seating, drinking fountains, picnic tables and benches, litter receptacles. Signage should be placed at entrances or other points where people gather.
   v. In addition to active physical recreation, Community Parks should provide opportunities for public art, performance space and community engagement in artistic and cultural expression.

5. NEIGHBORHOOD PARK

A civic space type designed for active and passive recreation with features and facilities that support the immediate neighborhood. Examples include: Perry Park, Albion Street Park, and Walnut Street Park

GRAPHIC STILL IN PRODUCTION

DIMENSIONS		
Size (min/max)	8,000 sq. ft.	2 acres

FURNISHINGS	
Seating (min)	n/a
Tables (min)	n/a

LANDSCAPE	
Trees (min)	1/350 sq. ft.
Permeable Surface (min)	85%
Landscape (min)	50%

a. Development Standards
   i. A Neighborhood Park must provide varied spaces that accommodate a wide range of ages, physical abilities and programming.
   ii. A Neighborhood Park must have multiple entrance points to encourage access from the surrounding neighborhood and from public transportation routes.
   iii. Trees must be planted to provide shade during summer months, especially in seating areas and playgrounds.
   iv. A minimum of one (1) combination compactable litter/recycling receptacle is required for every ten thousand (10,000) square feet of plaza area.

b. Design Guidelines
   i. Connectivity to the surrounding environment in a Neighborhood Park is vital. Sidewalks, bike paths, crosswalks and connections to larger transportation systems should be established and clear.
   ii. Wherever possible, spaced should be multi-use and flexible to accommodate as many different uses as possible.
   iii. Spaces in a Neighborhood Park should reflect the desires of the surrounding residents and provide programming that is relevant to that neighborhood's demographic and user groups.
   iv. Varied play environments that foster the development of children's cognitive, physical and social development are encouraged.
   v. Water features and changes in topography are encouraged.
   vi. Amenities and furnishings include, but are not limited to: seating, drinking fountains, picnic tables and benches, litter receptacles. Signage should be placed at entrances or other points where people gather.
   vii. Fencing and vegetation should preserve privacy for abutting yards while providing resident visibility into the park.
   viii. In addition to active physical recreation, Neighborhood Parks should provide opportunities for public art, performance space and community engagement in artistic and cultural expression. Public art and performances should reflect the neighborhood and preserve a sense of neighborhood identity.
   ix. Landscaping must consist of informally arranged trees and shrubs. The topography may be irregular.
   x. A NEIGHBORHOOD PARK should offer a variety of seating types and seating locations, including places to sit in the sun, in the shade, out of the wind, in groups, alone, close to activity, and in relative seclusion to every extent possible.

6. PUBLIC COMMON

A civic space type for active and passive recreation and civic purposes. A public common is a free standing site with thoroughfares on all sides and landscape consisting of naturally disposed lawns, paths, and trees. Examples include:

GRAPHIC STILL IN PRODUCTION

DIMENSIONS		
Size (min/max)	20,000 sq. ft.	8 acres

FURNISHINGS	
Seating (min)	1 linear foot / 400 sq. ft.
Tables (min)	n/a

LANDSCAPE	
Trees (min)	1/2,000 sq. ft.
Permeable Surface (min)	85%
Landscape (min)	60%

a. Development Standards
   i. A minimum of one (1) combination compactable litter/recycling receptacle is required for every ten thousand (10,000) square feet of plaza area.
b. Design Guidelines
   i. A PUBLIC COMMON should provide a substantially sized and uninterrupted open space that is landscaped with smooth ground covers, large trees, and little to no understory plants. Both paved and unpaved paths may be provided, as well as a substantial water feature.
   ii. Large canopy trees should be used in an informal manner to spatially define the perimeter while also framing views of neighboring buildings from within the PUBLIC COMMON.
   iii. A PUBLIC COMMON should be designed to promote options for children to engage in different forms of play; provide locations where sports, picnics, special events, and simple relaxation can occur for adults; and may include areas designed specifically to accommodate the activities of a public market.
   iv. Paths should provide a variety of walking/running circuits within the PUBLIC COMMON, accommodate DESIRE LINES to surrounding uses on neighboring BLOCKS, and provide different sensory experiences along their edge that change over time and vary across the PUBLIC COMMON.
   v. Entrances should be well designed to make visitors feel welcome and comfortable entering the space, be physically and visually accessible from surrounding blocks, and include areas for congregating in groups.

7. PUBLIC SQUARE

A civic space type designed for passive recreation and civic purposes. A public square is a free standing site with thoroughfares on all sides and landscape consisting of formally disposed lawns, paths, and trees. Examples include:

GRAPHIC STILL IN PRODUCTION

DIMENSIONS		
Size (min/max)	8,000 sq. ft.	2 acres

FURNISHINGS	
Seating (min)	1 linear foot / 275 sq. ft.
Tables (min)	n/a

LANDSCAPE	
Trees (min)	1 / 2,000 sq. ft.
Permeable Surface (min)	85%
Landscape (min)	60%

a. Development Standards
   i. A minimum of one (1) combination compactable litter/recycling receptacle is required for every ten thousand (10,000) square feet of plaza area.
b. Design Guidelines
   i. A PUBLIC SQUARE should have design characteristics in response to the surrounding civic, commercial, and/or residential context of surrounding buildings.
   ii. A PUBLIC SQUARE should offer a variety of seating types and seating locations.

8. PLAZA

A civic space type designed for passive recreation, civic purposes, and commercial activities, with landscape consisting primarily of hardscape. Plazas are generally located in activity centers or the nexus of major circulation routes. Example include: Statue Park Plaza and Union Square Plaza

GRAPHIC STILL IN PRODUCTION

DIMENSIONS		
Size (min/max)	8,000 sq. ft.	1.5 acres

FURNISHINGS	
Seating (min)	1 linear foot / 30 sq. ft.
Tables (min)	1 per every 4 movable chairs

LANDSCAPE	
Trees (min)	16 trees + 4 caliper inches/1,000 sq. ft.
Permeable Surface (min)	70%
Landscape (min)	30%

a. Development Standards
   i. The depth of any plaza is not permitted to be less than one third of the width.
   ii. Plazas must abut a public sidewalk on at least two (2) sides.
   iii. Plazas must be completely visible when viewed from the sidewalk of any adjacent thoroughfare.
   iv. Paths of circulation are required to connect any abutting sidewalk to all plaza and building entrances and major focal points and activity areas.
   v. At least fifty percent (50%) of the frontage area of a plaza must be free from obstructions. Frontage area is measured perpendicularly from any front lot line to a depth of fifteen (15) feet.
   vi. The surface of a plaza must be level with the abutting sidewalk. Minor changes in elevation not exceeding two (2) feet are permitted. Plazas over ten thousand (10,000) square feet in area may have up to twenty percent (20%) of the plaza area elevated up to four (4) feet above the grade of the abutting sidewalk, provided that the raised areas is setback from the front lot line at least twenty (20) feet.
   vii. Each plaza must provide at least two types of seating. Movable chairs may be counted as two (2) feet of linear seating per chair.
   viii. A minimum of one (1) linear foot of required seating for every two linear feet of plaza street frontage must be located within 15 feet of the adjacent sidewalk.
   ix. A minimum of 50% of any fixed seating must have seat backs.
   x. Steps provided for pedestrian circulation must have a height (rise) between 4 to 6 inches and minimum tread (run) of 17 inches, except that steps with a height (rise) of 5 inches may have a minimum tread (run) of 15 inches.
   xi. A minimum of one (1) combination compactable litter/recycling receptacle is required for every five thousand (5,000) square feet of plaza area.
   xii. Plazas that contain open air cafes or kiosks providing food service must provide one (1) additional litter receptacle and (1) additional recycling receptacle for every one thousand five-hundred (1,500) square feet of PLAZA area occupied by such outdoor eating area.

b. Design Guidelines
   i. A plaza should contain substantial areas of hardscape complemented by planting beds or formal arrangements of trees with open canopies. Paved surfaces that include a variety of patterns and colors are encouraged.
   ii. A plaza should offer an abundance and variety of seating types and seating locations, including places to sit in the sun, in the shade, out of the wind, in groups, alone, close to activity, and in relative seclusion to every extent possible.
   iii. Directional, educational, informational, and geographic signage should be placed in conjunction with other civic space amenities or places where paths cross.
   iv. The perimeter of a plaza should be well integrated into its surroundings and free from fences, hedges, and other barriers that would impede movement into the space and obscure visibility from adjacent street or building frontages.

9. POCKET PARK

A civic space type designed for passive recreation consisting of vegetation and a place to sit outdoors. Examples include: Quincy Street Park, Symphony Park, and Stone Place Park

GRAPHIC STILL IN PRODUCTION

DIMENSIONS		
Size (min/max)	800 sq. ft.	10,000 sq. ft.

FURNISHINGS	
Seating (min)	1 linear foot / 50 sq. ft.
Tables (min)	1 per every 3 movable chairs

LANDSCAPE	
Large Trees (min)	1 / 200 sq. ft.
Permeable Surface (min)	85%
Landscape (min)	30%

a. Design Guidelines
   a). A POCKET PARK should contain substantial areas of hardscape complemented by planting beds or formal arrangements of trees with open, spreading canopies.
   b). A POCKET PARK should offer an abundance and variety of seating types and seating locations.
   c). Benches and seating ledges or walls should be designed for the convenience and comfort of visitors, located in support of gathering spaces and along the perimeter of the space, but should be out of the flow of pedestrian traffic.
   d). A POCKET PARK should incorporate lighting that promotes safety while adding visual ambiance and character to the space at night. Lighting fixtures should be smaller-scale, frequently placed, and scaled to pedestrians. Fixture components (base, pole, luminaries) should have stylistic compatibility, while varying in form according to functional requirements. The indiscriminate use of bright lighting is prohibited.
   e). Entrances should be well designed to make visitors feel welcome and comfortable entering the space.

10. RECREATION FIELDS

A civic space type designed for active recreation, athletic activity, and competitive sports. Recreation fields may be freestanding or incorporated as a subordinate feature of a regional park or community park. Examples Include: Trum Field, Glen Park, and Tufts University Fields

GRAPHIC STILL IN PRODUCTION

DIMENSIONS		
Size (min/max)	7,500 sq. ft.	20 acres

FURNISHINGS	
Seating (min)	n/a
Tables (min)	n/a

LANDSCAPE	
Large Trees (min)	n/a
Permeable Surface (min)	n/a
Landscape (min)	n/a

a. Development Standards
   i. Recreation fields must provide regulation field and courts sizes tailor to the needs of the specific user groups the space is intended to serve.
   ii. The materials and construction methods of any recreation field including the choice of natural turf or synthetic fields must be designed to accommodate the projected carrying capacity of the field. Particular attention must be paid to permeability of subsurface materials, soil compaction, and drainage.

b. Design Guidelines
   i. Multi-purpose athletic fields that permit more cost-effective maintenance and shared amenities along with irrigation and lighting infrastructure are highly encouraged as an efficient use of land.
   ii. Where possible recreation fields should be considered as potential areas for ground water recharge facilities.
   iii. Choices for synthetic or natural turf should take into account community desire, maintenance and appropriateness to the site.
   iv. Playing surface for court games should be designed with appropriate surfaces such as clay, sand, and concrete, asphalt, or synthetic materials without expansion joints.
   v. The long axis of all recreation fields should be oriented to the north-south to every extend possible.

11. PLAYGROUND

A civic space type primarily designed as a play area for children. Playgrounds may be freestanding or incorporated as a subordinate feature of a regional park, community park, neighborhood park, or public common. Examples Include: Walnut Street Playground, Grimmons Park, and Chuckie Harris Park

GRAPHIC STILL IN PRODUCTION

DIMENSIONS		
Size (min/max)	2,500 sq. ft.	25,000 sq. ft.

FURNISHINGS	
Seating (min)	1 linear foot / 300 sq. ft.
Tables (min)	n/a

LANDSCAPE	
Trees (min)	1 / 500 sq. ft.
Permeable Surface (min)	85%
Landscape (min)	30%

a. Development Standards
   i. Design and construction of a playground must comply with the US Consumer Product Safety Commission's Public Playground Safety Handbook.
   ii. Playgrounds must be include equipment for two age groups: tot lot play equipment intended for children ages one (1) to five (5) and separate play equipment intended for children ages six (6) to ten (10).
   iii. Only commercial grade play equipment certified by the manufacturer is permitted.
   iv. Playground must include seating intended for parents and litter receptacles.
   v. Playground surfacing must be composed of a shock-absorbing surface with a maximum 2% slope. The material must meet all federal, state and local regulations.
   vi. Wooden play structures are prohibited.

b. esign Guidelines
   i. Playgrounds should be designed to engage children in developing their physical and social skills in a stimulating and safe environment.
   ii. Playgrounds should be designed to meet the widest range in needs of children of different ages and abilities to every extend possible.
   iii. Parks that have playground equipment, sports fields, and spray pads should be accessible to all children under sixteen (16) years in age.
   iv. Natural play areas constructed of boulders, logs and land forms and playground equipment made from 100% recycled plastic or steel is recommended.
   v. Steel play structures should be shaded by trees or other shade structures to decrease their surface temperature in the summer months.

12. DOG PARK

A civic space type designed for the active recreation of dogs and their owners. Dog parks may be freestanding or incorporated as a subordinate feature of a regional park, community park, or neighborhood park. Examples include: Zero New Washington Community Park, Nunziato Field Off Leash Recreational Area (ORLA)

GRAPHIC STILL IN PRODUCTION

DIMENSIONS	
Size (min/max)	10,000 sq. ft.

FURNISHINGS	
Seating (min)	1 linear foot / 275 sq. ft.
Tables (min)	n/a

LANDSCAPE	
Trees (min)	1/30 ft. of front lot line
Permeable Surface (min)	100%
Landscape (min)	10%

a. Development Standards
   i. Dog parks are not permitted adjacent to play grounds, recreation fields, and community gardens.
   ii. A DOG PARK is not permitted to be less than fifteen (15) feet in any dimension.
   iii. DOG PARKS must be fenced on all sides to a minimum height of 60 inches. Fence footings must be buried to a depth of one (1) foot and fence panels must be buried to a depth of six (6) inches at all locations except at entrances/exits.
   iv. DOG PARKS must have two entrances/exits.
   v. Entrances/exits must have a safety gate, with an outer and inner gate on either side of a minimum sixteen (16) square-foot "vestibule" area. This "vestibule" area serves as a buffer between the entrance and the rest of the park.
   vi. One (1) litter receptacle and one (1) dog valet must be provided near each entrance/exit.
   vii. A sub-base of crushed gravel or equivalent that will compact to a dense, graded permeable subsurface must be provided.
   viii. Requires trees must be planted along the perimeter of a dog park, outside of the fence.
   ix. Ground cover must be decomposed (crushed) granite or similar material that is non water-absorbing and devoid of organic material.
   x. Planting beds must be included along the outside of the perimeter fence to help screen the DOG PARK and reduce potential runoff.
   xi. DOG PARKS must include a watering area with a standard hose-bib.
   xii. Each DOG PARK must have a permanent sign, stating the hours of operation, rules, and regulations for the DOG PARK.

b. Design Guidelines
   i. Separated play areas for small dogs and large dogs are recommended.

c. Development Review
   i. The size of a DOG PARK may be reduced by Special Permit.
      a). In its discretion to approve or deny a special permit authorizing a dog park under ten thousand (10,000) square feet in size, the Planning Board shall consider the following:
         i). Proximity to nearby properties in residential use.
         ii). Proximity of the proposed dog park to larger existing dog parks that might provide more running/activity space for dogs.
         iii). The necessity to limit use of the dog park due to the decreased size.
         iv). The design quality of the proposed dog park in relation to the decreased size.
         v). The provision of adequate space for the recreation of dogs.

13. LANDMARK

A civic space type designed to commemorate an important event or important person in the history of the City of Somerville. Landmarks may be freestanding or incorporated as a subordinate feature of any other type of civic or recreation space. Examples include Paul Revere Park

GRAPHIC STILL IN PRODUCTION

DIMENSIONS		
Size (min/max)	n/a	n/a

FURNISHINGS	
Seating (min)	n/a
Tables (min)	n/a

LANDSCAPE	
Trees (min)	
Premeable Surface (min)	
Landscape (min)	

a. Development Standards
   i. Landmarks can take many forms including stone or metal memorials and monuments, statues, plaques, signage, or landscape designs.
   ii. Landmarks must be designed as permanent fixtures and made of materials that will withstand all weather conditions and the test of time.
   iii. Landmark design, size, placement should be appropriate and for the site.
   iv. Maintenance of landmarks, including any associated lighting should be considered in the design.
   v. Historic landmarks must be reviewed by the Historic Commission.
   vi. Landmarks recognizing veterans must be reviewed by the Veteran's Commission.

b. Design Guidelines
   i. The design, size, placement and format of the landmark should be integrated with, and compatible with the site.
   ii. Landmarks should be considered as special features that bring people together for a moment or longer, and enliven the experience visitors in exploring the City of Somerville.

14. COMMUNITY GARDEN

A civic space type designed as individual garden plots available to residents for urban agriculture purposes, including storage facilities for necessary equipment. Community gardens may be freestanding or incorporated as a subordinate feature of a community park, neighborhood park, or pocket park. Examples include: Albion Community Garden and the South Street Farm

GRAPHIC STILL IN PRODUCTION

DIMENSIONS		
Size (min/max)	5,000 sq. ft.	15,000 sq. ft.

FURNISHINGS	
Seating (min)	n/a
Tables (min)	n/a

LANDSCAPE	
Trees (min)	
Premeable Surface (min)	85%
Landscape (min)	

a. Development Standards
   i. Community gardens must be located in areas that are agriculturally suitable, including soil conditions, topography, and solar access.
   ii. Land area of a community garden must be level enough to support the intended use and meet all Americans with Disabilities Act requirements without the use of retaining walls that exceed three (3) feet in height.
   iii. A walkway must be provided adjacent to each individual plot. All walkways must have a minimum width of four (4) feet and all walkways, paths, and landings must meet ADA requirements.
   iv. A permanent, visually transparent fence must be provided at the perimeter of the community garden. Fencing must provide at least one (1) access gate and at least eight percent (80%) free from vines or other obstructions that will impede visual access.
   v. Refuse areas must be provided and screened to enclose all refuse generated from the garden plots.
   vi. Storage areas for tools, fertilizers, equipments, and other material must be enclosed and located in relative proximity to the rear and center of the site.
   vii. A water meter and hose bibs must be provided on site to provide access to all plots within the garden with the use of a twenty-five (25) foot hose. Hose bibs must be secured to a post and include a hose hanger.
   viii. Signage constructed of commercial grade outdoor materials must be posted at the entrance to the community garden providing the hours of operation, contact name and phone number, community garden rules, and the statement "on-site sale of produce is not permitted."
   ix. Farm-stands and the on-site sale of produce are prohibited.
   x. The maximum permitted height for accessory structures, such as trellises, arbors, or other plant supports, is six (6) feet.
   xi. The maximum height of any structure intended for storage is eight (8) feet.

b. Design Guidelines
   i. At least twelve (12) individual garden plots should be provided.
   ii. A minimum of one accessible plot should be provided for every twelve (12) plots.
   iii. The minimum size of individual garden plots should be twenty-five (25) square fee

D. THOROUGHFARES

1. DEVELOPMENT REVIEW

a. The development of thoroughfares requires site development plan approval as a prerequisite to the issuance of a zoning permit. See §10.C.5. Site Development Plan Approval for more information.

2. STANDARDS FOR ALL THOROUGHFARES

a. Thoroughfares must include vehicular lanes and sidewalks, excluding alleys.

b. Thoroughfares must be engineered and constructed in accordance with the City of Somerville's official thoroughfare design standards. In the absence of official standards, thoroughfares must be designed and constructed according to the standards deemed to be appropriate by the review board.

3. STREETS

a. Motor Vehicle Travel Lanes

i. Motor vehicle travel lanes may have a width between ten (10) feet minimum and twelve (12) feet maximum.

ii. No more than two (2) motor vehicle travel lanes may be combined for any single direction of traffic flow.

b. Motor Vehicle Parking Lanes

i. Motor vehicle parking lanes are required and must be eight (8) feet wide or narrower for parallel parking and eighteen (18) feet wide or narrower for diagonal parking.

ii. Gutter seams, drainage inlets, and utility covers must be flush with the pavement surface and oriented to prevent conflicts with bicycle tires.

iii. Gutter pans must be incorporated into the width of any parking lane.

c. Bike Lanes

i. Bike lanes may have a width between five (5) feet minimum and six (6) feet maximum.

ii. A six (6) to eight (8) inch solid white lane line must be used to visually separate motor vehicle travel lanes from any bike lane.

iii. A four (4) inch solid white lane line must be used to visually separate any bike lane from an adjacent motor vehicle parking lane, as applicable.

iv. Word, symbol, and arrow pavement markings (MUTCD Figure 9C-3) must be used to define any bike lane as the portion of a THOROUGHFARE dedicated for specific use by bicyclists.

v. Through bike lanes must be located to the left of any dedicated motor vehicle right-turn only lane.

vi. Lane striping must be dashed through areas of merging and crossing vehicles.

vii. Colored paint is required to enhance the visibility of bikes lanes in locations determined to be necessary by the Traffic and Parking Department or Director of Transportation & Infrastructure.

d. Sidewalks

i. All new and reconstructed sidewalks must be accessible to and usable by persons with disabilities in accordance with the Americans with Disabilities Act and the Rules and Regulations of the Massachusetts Access Board (521 CMR), as amended.

ii. Sidewalks must include a walkway and furnishing zone, and may include an edge and/or frontage zone as illustrated in Figure 6.2: Sidewalks.

a). Walkways must be a minimum of six (6) feet in width.

b). Furnishing zones must be a minimum of four (4) feet in width.

c). Edge zones (ie. "curbwalks") must be a minimum of two (2) feet in width.

d). Frontage zones must be a maximum of four and a half (4.5) feet in width.

iii. Sidewalks must include street trees planted within the furnishing zone in a regularly-spaced ALLEE pattern no greater than thirty (30) feet on center. Along retail frontages, street trees may be planted in an irregularly-spaced ALLEE pattern to avoid visually obscuring storefront windows and signage.

iv. When planted, street trees must be a minimum height of ten (10) feet and/or two (2) inches in

FIGURE 8.3 Sidewalks

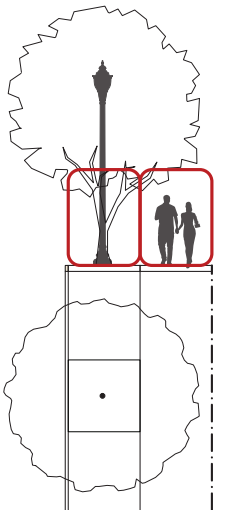

Furnishing Walkway

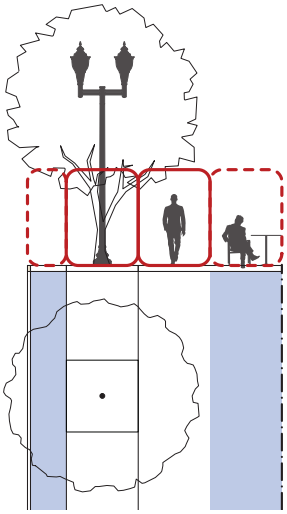

Edge Furnishing Walkway Frontage

caliper.

v. A minimum sixteen (16) sq. ft. open soil area must be left around each street tree, centered at the tree trunk. When level with an adjacent walkway, the soil area must be protected by six (6) inch metal fencing and mulch must be applied to a minimum depth of three (3) inches. When recessed below an adjacent walkway, open soil areas must be protected by metal tree grates.

vi. Sidewalks in front of TERMINATED VISTAS and along CIVIC SPACE frontage may be granted a WAIVER from street tree requirements at the discretion of the Planning Board.

vii. The pavement design of walkways must be continuous for the full length of each BLOCK FACE.

e. Sidewalk Extensions (see Figure 8.4)
   i. Sidewalk extensions must occupy the full width of the parking lane they extend into.
   ii. When a bike lane is present, sidewalk extensions must be set back so that the gutter does not extend into the bike lane.
   iii. At corners, sidewalk extensions must run at least five (5) feet from the corner area of the sidewalk as illustrated in Figure 8.4.
   iv. At bus stops, sidewalk extensions must run at least fifty (50) feet from the corner area of the sidewalk.

f. Pedestrian Crosswalks
   i. Crosswalks must be designed as shown in Table 8.1.
   ii. Crosswalk markings must be aligned with the walkway of all adjacent sidewalks unless granted a waiver by the Planning Board.
   iii. Where the walkway is wider than the prescribed width of the crosswalk, crosswalk markings should be widened to match the walkway of the sidewalk.

g. Curb Cuts
   i. Curb cuts may be no wider than the driveway or vehicular entrance they serve, excluding flares or returned curbs.

h. Driveway and Alley Crossings
   i. Driveway crossings traversing sidewalks with paved furnishing zones must be designed to maintain the grade and clear width of the walkway they cross and must include sloped flares on either side of the driveway apron as shown in Figure 8.5.
   ii. Driveway crossings traversing sidewalks with continuously planted furnishing zones must be designed to maintain the grade and clear width of the walkway they cross and must include returned curbs as shown in Figure 8.5.
   iii. The appearance of any walkway (ie. scoring pattern or special paving) must be maintained across any driveway or alley to indicate that, although a vehicle may cross, the area traversed by a vehicle remains part of the sidewalk.

i. All water and sewer utilities, storm water management infrastructure, public lighting, and public furniture must be designed and constructed according to criteria established by relevant City departments and/or adopted by the Planning Board.

FIGURE 8.4 Sidewalk Extensions

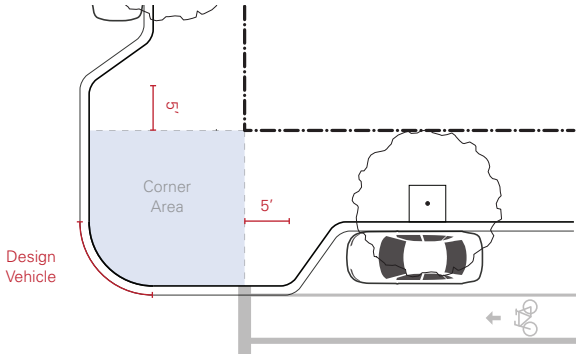

TABLE 8.1 Pedestrian Crosswalks

Total Width	10 feet
Stripe Thickness	1 foot
Stripe Length	10 feet
Stripe Offset	3 feet o.c.

FIGURE 8.5 Driveway and Alley Crossings

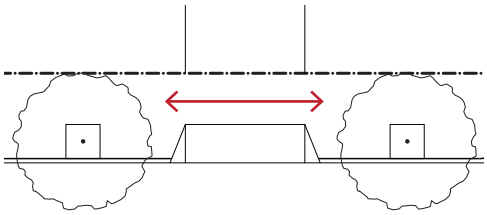

Crossing with Flares

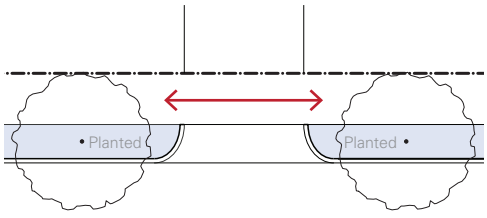

Crossing with Returned Curbs

4. COMMERCIAL ALLEY

a. Commercial alleys are required when an alley abuts any property within any mixed-use or special district on one (1) or more sides.
b. Commercial alleys must be twenty-four (24) feet wide in total right-of-way, with two (2), ten (10) foot wide travel lanes to accommodate vehicular traffic in each direction.
c. In new development requiring an alley, dry utilities should be aligned with the alignment of alley access provided for a block.

5. RESIDENTIAL ALLEY

a. Residential alleys are only permitted when an alley abuts properties within the Neighborhood Residential or Urban Residential district on both sides.
b. Residential alleys must be twenty (20) feet wide in total right-of-way, with a sixteen (16) foot wide, two-way, travel lane accommodating yield traffic and a two (2) foot shoulder on either side constructed of mountable paving or gravel subgrade.

6. MID-BLOCK PASSAGES

a. Mid-block passages must connect the sidewalk of one thoroughfare to another on opposite sides of a block.
b. Mid-block passages may be designed with a covered atrium providing continuous protection from the elements or as an open air passage between buildings.
c. Open air mid-block passages must be at least twenty (20) feet in width, with a minimum ten (10) foot wide paved walkway designed as a continuation of the sidewalks they connect, including materials and sidewalk furnishings.
d. A covered mid-block passage must be at least twenty (20) feet in width.
e. All mid-block passages must be lighted using footlights, bollard lights, building lights, or street lights to provide for safety and visibility at night.

E. PEDESTRIAN STREETS

1. INTENT

a. Pedestrian streets ensure certain thoroughfares are lined by continuous, pedestrian oriented block faces with buildings oriented toward the street, limited conflicts between pedestrians and motor vehicle traffic, and ground story uses that promote street life and reinforce the character of squares and main streets.

2. ADMINISTRATION

a. A "Pedestrian street" block face designation may be established or removed only in accordance with the provisions of §10.E.2. Zoning Text Amendment and §10.E.3. Zoning Map Amendment.

3. APPLICABILITY

a. This section is applicable to all development on any lot abutting a designated block face on the Pedestrian Streets Map.

4. STANDARDS

a. Lot Lines
   i. Any lot line abutting a designated pedestrian street is a primary front lot line.
b. Vehicular Access
   i. Vehicular access to parking lots, parking structures, loading facilities, and service areas for lots abutting a designated pedestrian street must be from an alley.
   ii. Curb cuts and driveways are prohibited for all lot lines abutting a designated pedestrian street.
c. Thoroughfares
   i. Types
      a). Alleys are not permitted on any block face abutting a designated pedestrian street.
   ii. Sidewalks
      a). When development occurs on any lot within the 5MU, 7MU, or 10MU district that abuts a designated pedestrian street where the sidewalk is less than twelve (12) feet in width, the building must be setback an additional distance to accommodate expansion of the abutting sidewalk to a width of at least twelve (12) feet. The minimum and maximum front setback for each building type is adjusted accordingly.
   iii. Curb Extensions
      a). Curb extensions are required for all pedestrian crossings of a designated pedestrian street to shorten the distance that pedestrians are required to cross.
d. Building Types
   i. Apartment buildings are not permitted on lots abutting a designated pedestrian street.
e. Use Categories
   i. The use of ground story spaces on lots fronting a designated pedestrian street must be from the following principal use categories:
      a). Arts & Creative Enterprise
      b). Eating & Drinking Establishment
      c). Retail

ARTICLE 9: COMMUNITY BENEFITS

AFFORDABLE HOUSING 231
- Purpose 231
- Applicability 231
- Affordable Units 231
- Unit Price 231
- Unit Delivery 232
- Right of First Refusal 232
- Alternative Compliance 232
- Buyouts & Payments 232
- Implementation Plan 233
- Household Selection 233
- Protection of Existing ADUs 233
- Compliance & Enforcement 233
- Performance Review 233

LINKAGE 234
- Purpose 234
- Applicability 234
- Linkage Fee 234
- Compliance & Enforcement 234
- Formula Recalculation 234

DENSITY BONUSES 235
- Purpose 235
- Applicability 235
- Bonus Program 235
- Amenities 235

A. AFFORDABLE HOUSING

1. PURPOSE

a. To implement the housing policy objectives of the comprehensive master plan of the City of Somerville.
b. To provide a range of housing types, unit sizes, and price points to accommodate the diverse household sizes, and life stages of Somerville residents, at all income levels, paying particular attention to providing housing affordable to individuals and families with low and moderate incomes.
c. To increase the supply of housing available to low- and moderate-income households to meet existing and anticipated future demand.
d. To ensure long-term security of affordable dwelling units.
e. To prevent the displacement of tenants of existing affordable dwelling units within the city.
f. To recapture a public benefit from the increased value of land resulting from the adoption of this Ordinance.

2. APPLICABILITY

a. This section is applicable to all residential development that chooses to build more than six (6) dwelling units in all zoning districts, whether new construction, substantial rehabilitation, residential conversion, or adaptive reuse.
b. Development shall not be segmented or phased in any manner to avoid compliance with the provisions of this section.

3. AFFORDABLE UNITS

a. Affordable dwelling units (ADUs) must be provided according to Table 9.1 Required ADUs.
    i. Transit-Oriented Areas
        a). Lots located within one-quarter (1/4) mile of a current or proposed MBTA rail transit station must provide the amount of ADUs specified in the first column (TOD Areas) of Table 9.1.
        b). Lots located within one-quarter (1/4) mile of a current or proposed MBTA rail transit station are identified on the Transit Orientation Map in the Zoning Atlas. See Article 1: Introductory Provisions for more information.
    ii. Non Transit-Oriented Areas
        a). Residential development on lots located outside of one-quarter (1/4) mile of a current or proposed MBTA rail transit station must provide the amount of ADU's specified in the second column (Non-TOD Areas) of Table 9.1.
b. Residential development with more than thirty (30) dwelling units must include at least twenty percent (20%) of provided ADUs with a minimum of three (3) bedrooms.
c. When the calculation for required ADUs results in a fractional value, the fractional value is rounded up to the next whole number and regarded as a whole unit. As an alternative, a fractional buyout may be paid to the City or its designee (including, but not limited to, the Affordable Housing Trust Fund and/or Somerville Housing Authority; hereafter referred to as "the City") according to the provisions of §9.A.8. Buyouts & Payments.
d. Development may provide more ADUs or provide ADU's for lower income tiers than the minimums required by Table 9.1 and Table 9.2.
e. ADUs must be proportional in quality to on-site market-rate units with respect to unit type, unit size, number of bedrooms, size of rooms, and type of features, which may be functionally equivalent, consistent with contemporary standards for new housing.

TABLE 9.1 Required ADUs

	ADUs (min)	
	(All TOD Areas)	(Non-TOD Areas)
Neighborhood Residence	n/a	n/a
Urban Residence	14.28%	12.5%
3 Story Mixed Use	14.28%	12.5%
4 Story Mixed Use	14.28%	12.5%
5 Story Mixed Use	16.67%	14.28%
7 Story Mixed Use	16.67%	14.28%
10 Story Mixed Use	16.67%	14.28%
Assembly Square	20%	16.67%
Brickbottom	20%	16.67%
Inner Belt	20%	16.67%
North Point	20%	16.67%
Tufts	n/a	n/a

4. UNIT PRICE

a. The price point of an ADU is set so that households with a up to a certain income can afford to pay without becoming cost burdened.
b. Actual price is calculated using the Median Family Income (MFI) for the Boston-Cambridge-Quincy, MA-NH HUD Metro FMR Area published annually by the U.S Department of Housing and Urban Development (HUD).
c. MFI is divided into three different tiers as indicated on Table 9.2 Target Income Tiers.

TABLE 9.2 Target Income Tiers

	Rental		For Sale
Tier 1	40% of MFI max.	Tier 1	70% of MFI max.
Tier 2	70% of MFI max.	Tier 2	100% of MFI max.
Tier 3	100% of MFI max.	Tier 3	120% of MFI max.

d. The income percentage of each tier is then adjusted using Table 9.3 to provide a higher income limit for larger dwelling units and a lower income limit for smaller dwelling units.

TABLE 9.3 Bedroom Count Adjustments

1	2	3	4	5	6	7	8
70%	80%	90%	100%	108%	116%	124%	132%

e. The maximum monthly rental price for an ADU is calculated as follows:
    i. The number of bedrooms provided in an ADU is substituted for the number of persons in a

household, or one (1) for a studio, to determine adjusted MFI using HUD's Family Size Adjustments.

ii. The adjusted MFI for the appropriate price limit tier is multiplied by thirty percent (30%) to determine the maximum amount of gross income that can be spent on housing expenses by a household without becoming cost burdened.

iii. The estimated cost of heat, electricity, and ~~hot~~ water/sewer (if any of these utilities are billed separately) is then subtracted from the result of §9.A.4.e.ii (above) to arrive at the maximum monthly rent that can be charged for the dwelling unit.

f. Maximum sale price of an ADU is calculated as follows:

i. The number of bedrooms in an ADU is substituted for the number of persons in a household, or one (1) for a studio to determine adjusted MFI using HUD's Family Size Adjustments.

ii. The adjusted MFI for the appropriate price limit tier is multiplied by thirty percent (30%) to determine the maximum amount of gross income that can be spent on housing expenses by a household without becoming cost burdened.

iii. The estimated cost of Private Mortgage Insurance (PMI), Real Estate Taxes (RET), Condominium Fees (CF), Homeowners Insurance (HI) if not included in the CF, and required parking fees (PF), if any, if not included in the CF, is subtracted from the result of §9.A.4.f.ii (above) to arrive at the maximum monthly mortgage payment that can be charged for the dwelling unit.

iv. A maximum mortgage loan amount is calculated based on the result of §9.A.4.f.iii (above), assuming a 30 year term and a current conventional interest rate.

v. The maximum mortgage loan amount is multiplied by 1.03 to determine the maximum price that can be charged for the ADU.

g. The price of an ADU must remain affordable to the originally designated income group in perpetuity, or for as long as legally permissible. Sale prices, resale prices, initial rents, and rent increases for the ADUs must be restricted by legally permissible instruments such as, but not limited to, deed covenants or restrictions, contractual agreements, or land trust arrangements.

5. UNIT DELIVERY

a. ADUs must be provided on-site, intermixed with the market rate units of the development subject to the provisions of this section.

b. ADUs may be provided as either for sale or for rent, consistent with the type of market-rate units provided in the development.

TABLE 9.4 ADU Diversity

	Tier 1	Tier 2	Tier 3
1st Unit	1		
2nd Units	1	1	
3rd Units	2	1	
4th Units	2	2	
5th Units	2	2	1

c. ADUs must be provided at different price tiers according to Table 9.4 and repeated for every five (5) ADUs provided.

6. RIGHT OF FIRST REFUSAL

a. The City reserves the right of first refusal and/or option to purchase at the time of the original sale and any subsequent resale of individual ADUs and any sale of a formerly for rental ADU.

b. Review boards may require for-sale ADUs to be sold to the City.

7. ALTERNATIVE COMPLIANCE

a. Location

i. Applicants may request to provide one or more required ADUs at an alternative location within the City of Somerville by Special Permit. This Special Permit is only authorized in extremely rare circumstances.

ii. In its discretion to approve or deny a special permit authorizing one or more ADUs to be provided off-site, the review board shall consider the following:

a). Any proposed alternative method of compliance is advantageous to the City in creating or preserving affordable housing and does not result in undue geographic concentration of affordable units;

b). Location, accessibility to schools and other services;

c). whether off-site units would provide more appropriate family housing than on-site units would;

d). availability of parking, proximity to public transportation;

e). availability of usable open space;

f). Off-site units must be compatible in all respects with the market rate units built on site, including quality and character, construction value, and site amenities (yards, parking, laundry facilities, etc.).

g). Off-site units must be designed to house three- (3) person or larger households, even if the market rate units are designed primarily to house one- and two- person households.

b. In-Lieu Payment

i. Applicants may request to make a payment to the City in lieu of providing one or more required ADUs by Special Permit. This Special Permit is only authorized in extremely rare circumstances.

ii. In its discretion to approve or deny a special permit authorizing a cash payment in lieu of on-site ADUs, the review board shall consider the following:

a). The current funding level of the Somerville Affordable Housing Trust Fund;

b). That any proposed alternative method of compliance is advantageous to the City in creating or preserving affordable housing.

8. BUYOUTS & PAYMENTS

a. The dollar value of any fractional buyout or in lieu payment is calculated as the amount of ADUs not provided (A) multiplied by the difference between the

average sales price of comparable market-rate units sold within the City of Somerville over the previous twelve (12) months (B) and the price of an ADU in the tier that would have been provided, as calculated according to §9.A.4 Unit Price (C).

9. IMPLEMENTATION PLAN

a. Prior to the issuance of any zoning permit or special permit for development subject to the provisions of this section, an affordable housing implementation plan must be approved by the Housing Division of the Mayor's Office of Strategic Planning and Community Development.
b. The affordable housing implementation plan must include all applicable information required by the Housing Division.

10. HOUSEHOLD SELECTION

a. The selection of buyers and/or tenants is subject to a lottery-based system administered by the Housing Division of the Mayor's Office of Strategic Planning and Community Development. Preference is given to households that live or work full-time within the City of Somerville.
b. The eligibility of buyers or tenants is calculated using the Median Family Income (MFI) for the Boston-Cambridge-Quincy, MA-NH HUD Metro FMR Area published annually by the U.S Department of Housing and Urban Development (HUD).
c. MFI eligibility for each tier is indicated on Table 9.5.

TABLE 9.5 Income Eligibility Tiers

	Rental		For Sale
Tier 1	31% - 50%	Tier 1	51% - 80%
Tier 2	51% - 80%	Tier 2	81% - 110%
Tier 3	81% - 100%	Tier 3	111% - 130%

Income Eligibility Tiers.

d. The income percentage of each tier is then adjusted using Table 9.6, resulting in higher income eligibility for larger households and lower income eligibility for smaller households.

TABLE 9.6 Household Size Adjustments

1	2	3	4	5	6	7	8
70%	80%	90%	100%	108%	116%	124%	132%

e. Buyers and tenants of ADUs must meet the income eligibility requirements of this section and other certification requirements established by the Housing Division at the time of purchase or execution of a lease agreement and then upon any subsequent resale or renewal of lease terms at least annually.

11. PROTECTION OF EXISTING ADUS

a. Development that results in elimination or discontinuance of an existing ADU is required to replace the unit(s) on a one-for-one basis or provide the number of ADUs required by Table 9.1 Required ADUs, whichever is more.

12. COMPLIANCE & ENFORCEMENT

a. The Housing Division of the Mayor's Office of Strategic Planning and Community Development shall establish standards to determine compliance with this Section, subject to approval by the Planning Board.
b. Certificates of Occupancy
   i. All covenants, contractual agreements, and other documents necessary to ensure compliance with this section must be approved and executed prior to and as a condition of the issuance of any certificate of occupancy for an ADU.
   ii. No certificates of occupancy shall be issued for any market rate units in a development subject to the provisions of this section until:
      a). all of the required ADUs have obtained certificates of occupancy, posted a bond, or other equivalent security arrangement, as required by the Housing Division.
      b). payment for any equivalent buyout required by this section has been made to the Affordable Housing Trust Fund or a definitive schedule for payment(s) must be approved by the Building Official or Review Board.
c. Annual Report
   i. Property owners renting directly to tenants of an ADU may be required to submit an annual statement detailing the rental income derived from the ADUs.
d. Failure to comply with the provisions of this section shall be punished with a fine according to the provisions of §10.G.1. Building Official.
   i. Fines must be paid to the Somerville Affordable Housing Trust Fund.

13. PERFORMANCE REVIEW

a. Suitability and performance of the provisions of this section shall be analyzed for potential revision and/or improvement every five (5) years from the effective date of this ordinance upon completion of a Housing Needs Assessment by the Housing Division.
b. Recommended changes to the provisions of this section shall be submitted to the Board of Aldermen for consideration.

B. LINKAGE

1. PURPOSE

a. To mitigate the increased demand for affordable housing in Somerville generated by employees of commercial real estate development that wish to live within the city.
b. To recapture a public benefit from the increased value of land resulting from the adoption of this Ordinance.

2. APPLICABILITY

a. This section is applicable to all development requiring any of the following:
    i. Administrative development review:
        a). Site development plan approval
        b). Large development plan approval
        c). Neighborhood development plan approval
    ii. Discretionary development review:
        a). Special Permit
        b). Variance

3. LINKAGE FEE

a. General
    i. Non-residential development more than thirty thousand (30,000) gross square feet in total floor area shall pay an affordable housing linkage fee (hereafter referred to as "linkage fee").
    ii. Phased development projects where each phase is less than thirty-thousand (30,000) gross square feet are not exempt from the required linkage fee.
    iii. Additions to structures that increase the total gross square footage to more than thirty-thousand (30,000) shall pay the required linkage fee.
    iv. Substantial rehabilitation of real property that has already paid the required linkage fee is exempt.
    v. The following uses are exempt from the required linkage fee:
        a). Real property owned by the City of Somerville;
        b). Religious uses protected by M.G.L. Chapter 40A, Section 3.
b. Fee Calculation
    i. The required linkage fee is five dollars and fifteen cents ($5.15) per square foot over thirty thousand (30,000) gross square feet of floor area.
    ii. Floor area used for accessory parking is excluded fro the linkage calculation.
c. Payment
    i. The required fee shall be paid to the Somerville Housing Trust Fund in five (5) annual installments.
    ii. No certificate(s) of occupancy shall be issued for real property that has not paid the first installment of the required fee.
    iii. The annual due date for each installment shall correspond with the date the first installment was paid.
d. Applicants who obtain a certificate of occupancy for one (1) phase of a project at a time, shall be required to pay a fee that is based on the number of square feet of space, in excess of thirty thousand (30,000) gross square feet for which the certificate of occupancy has been obtained. In the event that certificates of occupancy have been or will be obtained for two (2) or more phases totaling more than thirty thousand (30,000) gross square feet, the thirty thousand (30,000) gross square foot exemption shall be based on the combined square footage of phases.

4. COMPLIANCE & ENFORCEMENT

a. All covenants, contractual agreements, and other documents necessary to ensure compliance with this section shall be executed prior to and as a condition of the issuance of a certificate of occupancy.
b. Failure to pay the required linkage fee shall be punished with a fine according to the provisions of §10.G.1. Building Official.
c. Fines must be paid to the Somerville Housing Trust Fund.

5. FORMULA RECALCULATION

a. The amount of the affordable housing linkage fee shall be analyzed for potential recalculation every five (5) years from the effective date of this ordinance upon completion of a Housing Needs Assessment by the Housing Division.

C. DENSITY BONUSES

1. PURPOSE

a. To implement the community development objectives of the comprehensive master plan of the City of Somerville.
b. To recapture a public benefit from the increased value of land resulting from the adoption of this Ordinance.
c. To promote the creation of specific amenities in the public interest.

2. APPLICABILITY

a. This section is applicable to any Apartment Building or Mixed-Use Building in all zoning districts.
b. Compliance to the provisions of this section is determined during the development review required for each building type for the district where the property is located.

3. BONUS PROGRAM

a. Average dwelling unit size and minimum dwelling unit size may be reduced according to Table 9.7 in return for the identified amenity, subject to the provisions of §9.C.4. Amenities.

4. AMENITIES

a. Artist Studio Housing
   i. Qualifying criteria
      a). Any residential or mixed-use development in which greater than 50% of the dwelling units in the project are for artists.
      b). Units are restricted to occupants where at least one occupant of each unit must be a Certified Artist with the Somerville Arts Council.
      c). Occupants cannot be restricted from operating any accessory home occupation use permitted §5.C.2.
   ii. Compliance
      a). The Somerville Arts Council shall establish standards to determine compliance with this Section, subject to approval by the Planning Board.
      b). Dwelling units dedicated to Artist Housing must be deed restricted, registered, and submitted to the Building Official with the application for a Certificate of Occupancy.
      c). At least one occupant of each unit must maintain certified artist status with the Somerville Arts Council. Violations are considered an unlawful occupancy and subject to Enforcement Action, see §10.G.1.b.
b. Arts & Creative Enterprise Space
   i. Qualifying Criteria
      a). Any project incorporating a minimum of 10% of gross floor area or 10,000 square feet, whichever is greater, for any use within the following Arts & Creative Enterprise use subcategories: Artisan Production §5.B.2.a, Arts Exhibition §5.B.2.b, Art Sales & Services §5.B.2.c, or Shared Workspaces & Arts Education §5.B.2.f.
      b). Qualifying space must be in excess of any minimum arts or creative space requirements of the development project by this ordinance
   ii. Compliance
      a). The Somerville Arts Council shall establish standards to determine compliance with this Section, subject to approval by the Planning Board.
      b). The square footage dedicated to Arts & Creative Enterprise must be deed restricted, registered, and submitted to the Building Official with the application for a Certificate of Occupancy.
c. Affordable Housing
   i. Qualifying criteria
      a). Any project incorporating affordable units that qualify as inclusionary housing units, and meet or exceed the ADU Diversity of Table 9.4, in excess of 25% of project units.
   ii. Compliance
      a). Project must comply with §9.A.

TABLE 9.7 Density Bonuses

	Urban Residence	Mixed-Use Districts	Special Districts	Amenity Requirements
Artist Housing	10%	10%	10%	§9.C.4.a. Artist Studio Housing
Arts & Creative Enterprise Space	n/a	10%	10%	§9.C.4.b. Arts & Creative Enterprise Space
Affordable Housing	10%	10%	10%	§9.C.4.c. Affordable Housing
Co-Working Space	n/a	10%	10%	§9.C.4.d. Co-Working Space
Senior Housing	10%	10%	10%	§9.C.4.e. Senior Housing
Unit Size Diversity	10%	10%	10%	§9.C.4.f. Unit Size Diversity
Public Art	n/a	10%	10%	§9.C.4.g. Public Art

d. Co-Working Space
   i. Qualifying criteria
      a). Any project incorporating a minimum of 10% of gross floor area or 10,000 square feet, whichever is greater, for Co-Working §5.9.a.
      b). Qualifying space must be in excess of any minimum arts or creative space requirements of the development project by this ordinance
   ii. Compliance
      a). The square footage dedicated to Co-Working must be deed restricted, registered, and submitted to the Zoning Compliance Officer with the application for a Certificate of Occupancy.
e. Senior Housing
   i. Qualifying criteria
      a). Any project restricting occupancy of dwelling units to residents age 62 or older.
   ii. Compliance
      a). The Housing Division of the Mayor's Office of Strategic Planning and Community Development shall establish minimum quality standards for senior housing to determine compliance with this section.
      b). Dwelling units dedicated to Senior Housing must be deed restricted, registered, and submitted to the Zoning Compliance Officer with the application for a Certificate of Occupancy.
      c). Deed restricted units must maintain the minimum age of 62. Violations are considered an unlawful occupancy and subject to Enforcement Action, see §10.G.1.b.
f. Unit Size Diversity
   i. Qualifying project
      a). Any project incorporating
         i). a minimum of 25% of units having 3 or more bedrooms and 1 ½ baths and a minimum of 1100 square feet of floor area.
         ii). a minimum of 20% of units being studio units with a maximum of 500 square feet of floor area.
   ii. Compliance
      a). Unit size diversity requirements must be submitted to the Building Official with the application for a certificate of occupancy.
      b). Unit sizes shall be deed restricted.
      c). Unit sizes shall not be permitted to change without review and approval of the Building Official and determination of continued compliance with this section.
g. Public Art
   i. Qualifying project
      a). Any project incorporating on site public art
      b). Public art does not include any of the following:
         i). Decorative, ornamental, or functional elements of the building or public space unless they are designed by an artist and created specifically for the site
         ii). Landscape areas or furnishings required by this ordinance.
      c). Public art must be located in a place visible from a public thoroughfare.
      d). Public art must be equal to or greater than the cost of 1% of total hard construction costs.
   ii. Compliance
      a). The Somerville Arts Council shall establish standards to determine compliance with this Section, subject to approval by the Planning Board.
      b). The Arts council shall have final determination as to what items, works, materials, media and infrastructure qualify as public art and how its placement within the development project shall qualify it as public art.
      c). Applicant must establish an agreement with the Somerville Arts Council, prior to the issuance of a zoning permit, committing to provide, install, and maintain the public art
      d). All art must be installed prior to application for a certificate of occupancy.
      e). All art must be maintained in perpetuity
      f). Art may be replaced. Art replaced is subject to review by the Arts Council and must be of similar cost to original art permitted.
      g). The Arts Council may require the posting of financial security equal to the cost of the required public art, prior to construction.

ARTICLE 10: ADMINISTRATION

STANDARD PROCEDURES 239
- Application Submittal 239
- Public Notice 239
- Public Hearings 240
- Certification & Recording of decision 240

PRELIMINARY REVIEW..... 241
- Pre-Submittal Meeting 241
- Neighborhood Meeting 242
- Design Review 243

ADMINISTRATIVE DEVELOPMENT REVIEW..... 244
- Zoning Permit 244
- Building Permit 245
- Certificate of Occupancy 246
- Written Interpretation 247
- Site Development Plan Approval 248
- Large Development Plan Approval 249
- Neighborhood Development Plan Approval 250
- Subdivision Plan Approval 251
- Plan Revision 252

DISCRETIONARY DEVELOPMENT REVIEW 253
- Special Permit 253
- Urban Design Waiver 254
- Variance 255

LEGISLATIVE PROCEDURES..... 256
- Land Conveyance 256
- Zoning Text Amendment 257
- Zoning Map Amendment 258

APPEALS 259
- Building Code Appeal 259
- Administrative Appeal 260
- Judicial Appeal 261

REVIEW BOARDS & OFFICIALS..... 262
- Building Official 262
- Zoning Board of Appeals 263
- Planning Board 264
- Urban Design Commission 265
- Planning Director 266

A. STANDARD PROCEDURES

1. APPLICATION SUBMITTAL

a. Preliminary Review
   i. Prior to formal submittal of an application for development review, an applicant may be required to have a pre-submittal meeting with city staff, a neighborhood meeting with the public, and/or a design review meeting with the Urban Design Commission.

b. Submittal
   i. Applications for development review must include all necessary information and submittal materials required by the Building Official and the Planning Director. All application requirements shall be made available to the public on the City website.
   ii. When multiple types of development review are required, those applications may, at the discretion of the designated review board or official, be processed simultaneously.

c. Completeness
   i. An application for development review is not considered complete until all necessary information has been supplied by the applicant and all fees have been paid, including fees for costs incurred by the City for public notice.
   ii. Upon written request by an applicant, the designated review board may, in its discretion, waive any of the information required when applying for development review.
   iii. Completed applications will be scheduled for a public hearing, publicly noticed, and/or administratively evaluated as indicated for each type of development review (see §10.C.1. Zoning Permit through §10.D.3. Variance).
   iv. Incomplete applications will not be scheduled for a public hearing, publicly noticed, or administratively evaluated.
   v. If an application reaches a public hearing and the review board deems the submittal incomplete, the board has the option to do one of the following:
      a). deny the application;
      b). allow the applicant to withdraw the application without prejudice according to §10.A.1.d. Withdrawal; or
      c). waive the procedural time requirements according to §10.A.3.c. Continuance.

d. Withdrawal
   i. An application may be withdrawn without prejudice at any time prior to the issuance of the public notice advertising the development review public hearing where the application will be reviewed.
   ii. Once the public notice advertising a development review public hearing has been issued, a request to withdraw an application can only be granted by a four-fifths majority of the review board.
   iii. Upon request to withdraw without prejudice, the review board has the option to do one of the following:
      a). approve a request to withdraw without prejudice; or
      b). deny the request and proceed to evaluate the application based on the merits of the information submitted.
   iv. Withdrawn applications are not eligible for a refund of fees.

e. Repetitive Applications
   i. A denied application will not be reconsidered for a minimum of two (2) years from the date final action was taken by the review board unless the Planning Board determines by a four-fifths majority vote that substantial new evidence is available, or a significant mistake of law or of fact was made in the prior denial, that justifies reconsideration of the application.
   ii. If the application is resubmitted earlier than two (2) years from the date of final action, the subsequent application must include a detailed statement of the evidence justifying its reconsideration.
   iii. Re-submittal of applications withdrawn without prejudice shall not be considered a repetitive application.

f. Failure to Act
   i. Failure by a review board or official to hold a public hearing or take final action on an application within the maximum time requirement or permitted extensions, as applicable, shall result in the approval of the application at the expiration of said time periods.

2. PUBLIC NOTICE

a. Mailed, published, and posted public notice of a development review or legislative procedure public hearing is provided to inform the general public of the public hearing or meeting and to inform neighboring land owners of any potential development impacts.

b. Costs incurred by the City for public notice of a development review or legislative procedure public hearing must be prepaid by the applicant according to the rules & regulations of the designated review board.

c. Mailed Notice
   i. Notice of a neighborhood meeting, development review public hearing, or legislative procedure public

TABLE 10.1 Mailed Notices

	Neighborhood Meeting	SP, V, DSPA, LDPA, NDPA, W	Land Conveyance	Zoning Map or Text Amendments
Applicant	✓	✓		
Direct Abutters	✓	✓	✓	
Abutters within 300 feet	✓	✓		
Planning Board of any Abutting City or Town		✓		✓
Massachusetts Department of Housing & Community Development				✓
Metropolitan Area Planning Council				✓

SP = Special Permit, V = Variance, SDPA = Site Development Plan Approval, LDPA = Large Development Plan Approval, NPDA = Neighborhood Development Plan Approval, UDW = Urban Design Waiver

TABLE 10.2 Public Hearings

	Zoning Board of Appeals	Planning Board	Urban Design Commission	Board of Aldermen
Special Permit	✓	✓		
Waiver		✓		
Variance	✓			
Site Development Plan Approval	✓	✓		
Large Development Plan Approval		✓		
Neighborhood Development Plan Approval		✓		
Land Conveyance				✓
Zoning Map Amendment				✓
Zoning Text Amendment				✓
Administrative Appeal	✓			

hearing shall be mailed as indicated on Table 10.1.

d. Published Notice
   i. Notice of a development review or legislative procedure public hearing shall be published in a newspaper of general circulation in the City of Somerville no less than fourteen (14) days in advance of the scheduled hearing date, with a second notice the following week.

e. Posted Notice
   i. Notice of a design review or neighborhood meeting shall be posted in a conspicuous place in City Hall no less than seven (7) days in advance of the scheduled meeting date.
   ii. Notice of a development review or legislative procedure public hearing shall be posted in a conspicuous place in City Hall no less than fourteen (14) days in advance of the scheduled hearing date.
   iii. Notice of a development review public hearing shall be posted in a conspicuous place at the subject property no less than seven (7) days in advance of the scheduled meeting date.

f. Appeal for Improper Notice
   i. Any aggrieved party may appeal the decision of any review board or official when claiming improper notice of a development review public hearing or meeting according to the procedures of §10.F.3. Judicial Appeal.
   ii. Judicial appeals claiming improper notice of a development review public hearing or meeting must be filed per MGL 40A.

3. PUBLIC HEARINGS

a. Hearing Administration
   i. Public hearings shall be conducted in accordance with the procedures set forth in M.G.L. Chapter 40A, as amended; any and all requirements of The Code of Ordinances, City of Somerville, Massachusetts; the rules & regulations of review boards; and as indicated for each type of development review (see §10.C.1. Zoning Permit through §10.D.3. Variance).

b. Access to Documents
   i. ~~Application information and~~ Relevant development plan documentation on file shall be posted on the City website prior to the notice of a public hearing.
   ii. Physical copies of application information, development plan documentation, and other related correspondence are available to inspect or copy by any party upon reasonable request and payment of a fee to cover the cost of such copies.

c. Continuance
   i. Upon mutual agreement by the applicant and a four-fifths majority of the review board, the following procedural requirements may be extended:
      a). the time limit required for commencement of a public hearing;
      b). the time limit required to make a decision.
   ii. Mutual agreement of extended time limits will be recorded in writing.

d. Decision
   i. Decisions shall include a detailed record of proceedings indicating the vote of each member, the reason for its decision, its official actions and any conditions of approval.

4. CERTIFICATION & RECORDING OF DECISION

a. Filing of the Decision
   i. Decisions will be filed with the Office of the City Clerk as indicated for each type of development review (see §10.C.1. Zoning Permit through §10.D.3. Variance). The City Clerk will date stamp the decision, beginning the time period for which an appeal may be filed.

b. Notice of the Decision
   i. Notification of the decision shall be mailed to the petitioner, applicant, and appellant, as applicable.

c. Certification
   i. After the time period for appeal has expired (see Section 10.E. Legislative Procedures), the Applicant must take a copy of the decision provided by the Planning Division to the Office of the City Clerk for certification that no appeals have been filed.

d. Archiving of Decision
   i. Once the Office of the City Clerk has certified that the decision has not been appealed, the Applicant must archive the decision with the property authority as follows:
      a). For unregistered land,
         i). the Applicant must submit the certified copy of the decision to the Middlesex South Registry of Deeds.
      b). For registered land,
         i). the Applicant must submit the certified copy of the decision to the Land Court.
   ii. No zoning permit will be issued without physical evidence that a required or requested special permit, waiver, and/or variance granted by a review board has been properly filed with the Middlesex South Registry of Deeds or land court.

B. PRELIMINARY REVIEW

1. PRE-SUBMITTAL MEETING

a. Purpose
   i. A pre-submittal meeting assists with the following:
      a). informing an applicant of relevant development review application criteria, standards, and procedure;
      b). examination of previous development review applications and permits for the site;
      c). idenfication of potential concerns by the applicant and City staff at the earliest opportunity in the development process.

b. Applicability
   i. A pre-submittal meeting is highly recommended for all development review applications requiring only a Zoning Permit.
   ii. A pre-submittal meeting is required mandatory for the following:
      a). Site Development Plan Approval
      b). Large Development Plan Approval
      c). Neighborhood Development Plan Approval
      d). Subdivision Plan Approval
      e). Plan Revision
      f). Special Permit
      g). Variance
      h). Land Conveyance
      i). Zoning Text Amendment
      j). Zoning Map Amendment
   iii. Pre-submittal meetings are advisory and not intended as an exhaustive review of all potential issues. Participation in a pre-submittal meeting does not absolve an applicant of any responsibility for legal or technical due diligence investigation.
   iv. Applications for development review that require a pre-submittal meeting are not considered complete until such a meeting has been held.

c. Procedure
   i. A pre-submittal meeting must occur at least three (3) days prior to formal submittal of an application for development review.
   ii. Applicants or their representatives are required to attend a pre-submittal meeting.
   iii. Applicants are required to bring all information and materials required by the Building Official/Planning Director to a pre-submittal meeting.

2. NEIGHBORHOOD MEETING

a. Purpose
   i. A neighborhood meeting facilitates appropriate community participation in the development review process; provides an applicant with an opportunity to present a development proposal to the public during the conceptual design phase; and allows the public to identify and discuss issues and potential impacts of the development proposal with the applicant.
   ii. Neighborhood meetings are intended to promote submittal of applications for development review that are more responsive to neighborhood concerns and to expedite and lessen the expense of the review process by reducing continuances and appeals.

b. Applicability
   i. A neighborhood meeting is mandatory as indicated elsewhere in this Ordinance. See Article 2: Base Districts, Article 4: Special Districts, Article 8: Public Realm Standards, and §10.C.1. Zoning Permit through §10.D.3. Variance for more information.
   ii. When required by this Ordinance, only one (1) neighborhood meeting is necessary, but the applicant may hold multiple meetings as desired.
   iii. Applications for development review that require a neighborhood meeting are not considered complete until such a meeting has been held.
   iv. Applications for development review must be submitted within one hundred and eighty (180) days of the neighborhood meeting. If an application is not submitted in this time frame, the Applicant is required to hold a new neighborhood meeting.

c. Procedure
   i. A neighborhood meeting must occur at least ten (10) days prior to formal submittal of an application for development review.
   ii. Neighborhood meetings should be held at a location in close proximity to the subject property on a weekday evening after 6:00 p.m. or on weekends at any reasonable time and shall not occur on a local, state, or national holiday.
   iii. Applicants or their representatives are required to attend a neighborhood meeting.
   iv. The Applicant is responsible for coordinating a neighborhood meeting in conjunction with the Ward representative from the Board of Aldermen and the Staff of the Mayor's Office of Strategic Planning and Community Development.
   v. The format and agenda of the neighborhood meeting is at the discretion of the applicant, in consultation with the Ward representative from the Board of Aldermen, and may consist of any or all of the following:
      a). formal presentation
      b). on-site walkthrough
      c). a drop-in, open house style informational session
   vi. Opportunity must be provided for attendees to ask questions regarding the development review application.
   vii. Applicants are required to bring all information and materials required by the Building Official/Planning Director to a neighborhood meeting:
   viii. The Applicant shall submit a report and minutes of the neighborhood meeting to the Building Official at the time application submittal that includes, at a minimum, the following:
      a). a list of those persons and organizations contacted about the meeting, and manner and date of contact. (See §10.A.2. Public Notice);
      b). the date, time, and location of the meeting;
      c). a roster or signature sheet of attendees at the meeting;
      d). a summary of issues discussed at the meeting;
      e). copies of all materials provided by the applicant at the meeting; and
      f). a description of any changes to the application made as a result of the meeting.

3. DESIGN REVIEW

a. Purpose
   i. ~~A~~ Design review provides an applicant with an opportunity to receive advice and recommendations from the professional design community to ensure that development protects and enhances the public realm and human scale of the City.

b. Applicability
   i. Design review is mandatory as indicated elsewhere in this Ordinance. See Article 2: Base Districts, Article 4: Special Districts, Article 8: Public Realm Standards, and §10.C.1. Zoning Permit through §10.D.3. Variance for more information.
   ii. Applications for development review that require a design review are not considered complete until the review has been completed.

c. Authority
   i. The Urban Design Commission provides advice and recommendations for all development requiring design review.

d. Procedure
   i. A design review meeting must occur at least ten (10) days prior to formal submittal of an application for development review.
   ii. Applicants or their representatives are required to attend a design review meeting.
   iii. Applicants are required to bring all information and materials required by the Building Official/Planning Director to a design review meeting.
   iv. The Applicant shall submit a report and minutes of the design review meeting to the Building Official at the time application submittal that includes, at a minimum, the following:
      a). the date, time, and location of the meeting;
      b). a roster of members of the Urban Design Commission in attendance at the meeting;
      c). a summary of issues discussed at the meeting;
      d). copies of all materials provided by the applicant at the meeting; and
      e). a description of any changes to the application made as a result of the meeting.

e. Recommendation Criteria
   i. In providing design guidance required by this Ordinance or a review board, the Urban Design Commission shall provide recommendations for the following:
      a). Consistency with any design guidelines of this Ordinance or other existing policy plans of the City of Somerville.
      b). Considerations indicated elsewhere in this Ordinance for the specific type of design review required.

C. ADMINISTRATIVE DEVELOPMENT REVIEW

1. ZONING PERMIT

a. Purpose
   i. A zoning permit certifies that development plans conform to the provisions of this Ordinance and that any additional type of development review required by this Ordinance has been completed in accordance with the provisions of this Article.

b. Authority
   i. The Building Official reviews and approves all applications for a zoning permit.

c. Applicability
   i. All development requires a zoning permit.
   ii. No zoning permit shall be issued for applications that require any additional type of development review until that review has been completed in accordance with the provisions of this Article.
   iii. No building permit, certificate of occupancy, or construction permit shall be issued until a zoning permit has been issued by the Building Official.
   iv. In cases where both a building permit and a certificate of occupancy are required, a zoning permit is only required prior to the issuance of the building permit.

d. Procedure
   i. The approval or denial of an application for a zoning permit is conducted administratively.
   ii. The Building Official shall forward applications for a zoning permit that require any additional type of development review to the appropriate review board, subject to the applicable procedural requirements of this Article.
   iii. Within ten (10) days after receiving a completed application for a zoning permit that does not require any further type of development review, the Building Official shall issue such permit, or transmit, in writing, the reasons for failure to issue such permit to the applicant.
   iv. When considering a revision to a previously approved application for a zoning permit, the Building Official shall limit their review to the proposed changes to the previously approved application.

e. Validity
   i. A zoning permit remains valid for ninety (90) days.

f. Review Criteria
   i. The Building Official shall approve an application for zoning permit upon verifying the following:
      a). that the submitted plan conforms with the provisions of this Ordinance;
      b). the application is consistent with all prior approvals for the subject property; and
      c). any additional type of administrative or discretionary development review required by this Ordinance has been completed in accordance with the provisions of this Article.

g. Inspections
   i. Submittal of an application for a zoning permit provides consent, by the applicant, for the Building Official to enter upon private real property to conduct routine inspections as needed.

h. Appeals
   i. Administrative Appeal
      a). An aggrieved party may appeal the decision of the Building Official according to the procedures of §10.F.2. Administrative Appeal.
      b). Administrative appeals must be filed within thirty (30) days after the filing of a decision with the Office of the City Clerk.

2. BUILDING PERMIT

a. Purpose
   i. A building permit certifies that the construction documents for a proposed structure or sign conforms with the Massachusetts Building Code and all applicable Ordinances.

b. Applicability
   i. No building or structure shall be constructed, reconstructed, altered, moved, repaired, demolished, or removed nor shall any equipment be installed, including signs, nor shall any excavation begin, until a building permit has been issued by the Building Official.
   ii. No building permit shall be issued until a zoning permit has been issued by the Building Official.
   iii. No building permit shall be issued for development if construction documents do not accurately reflect the following:
      a). any development plan documentation submitted as part of a development review application.
      b). conditions attached to any administrative or discretionary development review approval.

c. Authority
   i. The Building Official reviews and approves all applications for a building permit.

d. Procedure
   i. The approval or denial of a building permit application is conducted administratively.
   ii. Within thirty (30) days after receiving a completed application for a building permit, the Building Official shall issue such permit, or transmit, in writing, the reasons for failure to issue such permit to the applicant.

e. Validity
   i. Construction must begin within six (6) months following the issuance of a Building Permit and continue towards completion in a continuous and expeditious manner for the permit to remain valid.

f. Inspections
   i. Submittal of a building permit application provides consent, by the applicant, for the Building Official to enter upon private real property to conduct routine inspections as needed.

g. Appeals
   i. Administrative Appeal
      a). Any aggrieved party may appeal an interpretation, order, requirement, direction, or failure to act by the Building Official according to the procedures of §10.F.2. Administrative Appeal.
      b). Administrative appeals must be filed within thirty (30) days after the filing of a decision with the Office of the City Clerk.
   ii. Building Code Appeal
      a). Any aggrieved party may appeal an interpretation, order, requirement, direction, or failure to act by the Building Official according to the procedures of §10.F.1. Building Code Appeal.
      b). Building code appeals must be filed within forty-five (45) days after notice is served of an interpretation, order, requirement, direction, or failure to act by the Building Official.

3. CERTIFICATE OF OCCUPANCY

a. Purpose
   i. A certificate of occupancy certifies that a building or structure is safe for occupation and/or use according to all applicable Ordinances and that proper inspections have been carried out by the Building Official during any construction, reconstruction, alteration, repair, or demolition activities permitted pursuant to a building permit.

b. Applicability
   i. No real property shall be occupied or used and no existing use of real property shall be changed until a certificate of occupancy has been issued by the Building Official.
   ii. No certificate of occupancy shall be issued until a zoning permit has been issued by the Building Official.
   iii. No certificate of occupancy shall be issued for development that does not comply to the following:
      a). any development plan documentation submitted as part of a development review application.
      b). conditions attached to any administrative or discretionary development review approval.

c. Authority
   i. The Building Official reviews and approves all applications for a certificate of occupancy.

d. Procedure
   i. The approval or denial of a certificate of occupancy application is conducted administratively.
   ii. Within ten (10) days after final inspection for a certificate of occupancy, the Building Official shall issue such certificate, or transmit, in writing, the reasons for failure to issue such certificate to the applicant.

e. Inspections
   i. Submittal of a certificate of occupancy application provides consent, by the applicant, for the Building Official to enter upon private real property to conduct inspections as needed.

f. Appeals
   i. Administrative Appeal
      a). Any aggrieved party may appeal an interpretation, order, requirement, direction, or failure to act by the Building Official according to the procedures of §10.F.2. Administrative Appeal.
      b). Administrative appeals must be filed within thirty (30) days after the filing of a decision with the Office of the City Clerk.
   ii. Building Code Appeal
      a). Any aggrieved party may appeal an interpretation, order, requirement, direction, or failure to act by the Building Official according to the procedures of §10.F.1. Building Code Appeal.
      b). Building code appeals must be filed within forty-five (45) days after notice is served of an interpretation, order, requirement, direction, or failure to act by the Building Official.

4. WRITTEN INTERPRETATION

a. Purpose
   i. A written interpretation is a formal explanation or clarification of the regulations of this ordinance as applied to specific cases.

b. Applicability
   i. A written interpretation may be requested by the public only for a pending application for development review.
   ii. The Building Official may issue a written interpretation of any specific provision(s) of this Ordinance as applied to any specific property or development proposal under development review at their own initiative, without petition from the public.
   iii. A written interpretation does not require the Building Official or any review board to reach a particular decision for any application for development review if the facts of the application, property, location, or character of the development proposal differ from those stated or assumed in a previously issued written interpretation.
   iv. Written interpretations shall be consistent with the intent and purpose of this Ordinance and cannot contradict or override any provision of this or any other Ordinance.

c. Authority
   i. The Building Official issues written interpretations.

d. Procedure
   i. The issuance of a written interpretation is conducted administratively.
   ii. Within thirty (30) days after receiving a petition for a written interpretation, the Building Official must
      a). review the specific provision or provisions to be interpreted and the facts of the specific situation concerning the request for an interpretation;
      b). issue, in writing, meaningful explanation or clarification of the provision in question;
      c). file the written interpretation with the Office of the City Clerk; and
      d). post the written interpretation on the City website.
   iii. The Building Official may require further facts and information as are, in their judgment, necessary to provide a meaningful interpretation of the provision in question.

e. Appeals
   i. Administrative Appeal
      a). An aggrieved party may appeal the decision of the Building Official according to the procedures of §10.F.2. Administrative Appeal.
      b). Administrative appeals must be filed within thirty (30) days after the filing of a decision with the Office of the City Clerk.

5. SITE DEVELOPMENT PLAN APPROVAL

a. Purpose
   i. Site development plan approval is the administrative review and approval of a zoning permit application for development with the potential for significant on-site or off-site impacts to certify that the plans conform to the provisions of this Ordinance.
   ii. The site development plan approval process provides an applicant with the opportunity to submit architectural, site, landscape, or engineering plans so that compliance to the provisions of this Ordinance can be determined prior to preparation of construction documents.

b. Applicability
   i. No zoning permit shall be issued for development that requires site development plan approval until the designated review board has held a public hearing and approved the plan.
   ii. The review and approval of an application for site development plan approval is conducted administratively at a public hearing.
   iii. Approval of a site development plan authorizes the Building Official to issue a zoning permit.

c. Authority
   i. The Zoning Board of Appeals review and approves all applications for that require site development plan approval for development in the NR, UR, 3MU, and 4MU districts.
   ii. The Planning Board reviews and approves all applications for that require site development plan approval for development in all other districts.

d. Procedure
   i. Within four-five (45) days after receiving a completed application for a zoning permit that requires site development plan approval, the Planning Board must review the application and hold a public hearing.
   ii. Within twenty (20) days of the closing of the public hearing, the Planning Board must make a decision to approve, approve with conditions, deny, or grant withdrawal the application for site development plan approval.
   iii. When considering a revision to a previously approved application for site development plan approval, the Planning Board shall limit their review to the proposed changes to the previously approved application.

e. Review Criteria
   i. The review board shall approve an application for site development plan approval upon verifying that the submitted plan conforms with the provisions of this ordinance and demonstrates consistency to the following:
      a). the adopted comprehensive Master Plan of the City of Somerville and existing policy plans and standards established by the City.
      b). the purpose of this Oridnance in general;
      c). the purpose of the district where the property is located; and
      d). considerations indicated elsewhere in this Ordinance for the required site development plan approval.
   ii. The review board may reject a application for site DEVELOPMENT PLAN approval only when:
      a). the submittal fails to furnish adequate information required for approval;
      b). the imposition of reasonable conditions would not ensure compliance to standards, as applicable; and/or
      c). the submittal, although proper in form, includes or creates an intractable problem so intrusive on the needs of the public in one regulated aspect or another and cannot be adequately mitigated.

f. Compliance
   i. The review board may require the posting of a bond or other performance guarantee to assure compliance with the site DEVELOPMENT PLAN and/or conditions, as approved.

g. Conditions
   i. The review board may attach conditions and/or limitations that it deems necessary in order to ensure compliance to the provisions applicable to development requiring site development plan approval.

h. Appeals
   i. Administrative Appeal
      a). An aggrieved party may appeal the decision of the Building Official according to the procedures of §10.F.2. Administrative Appeal.
      b). Administrative appeals must be filed within thirty (30) days after the filing of a decision with the Office of the City Clerk.
   ii. Judicial Appeal
      a). An aggrieved party may appeal the decision of the Planning Board according to the procedures of §10.F.3. Judicial Appeal.
      b). Judicial appeals must be filed within twenty (20) days after the filing of a decision with the Office of the City Clerk.

6. LARGE DEVELOPMENT PLAN APPROVAL

a. Purpose
   i. Large development plan approval is the administrative review and approval of a plan coordinating the development of multiple blocks or buildings, necessary infrastructure improvements, and regulatory & permitting decisions as development proceeds within a subject area.
   ii. The large development plan approval process provides an applicant with the opportunity to submit a plan illustrating a framework for future development without preparing detailed site plans or architectural and engineering drawings for thoroughfares, civic spaces, lots, or buildings that can be approved separately at a later date as project phases and individual lots are built out.

b. Applicability
   i. Large development plan approval is only available as specifically authorized by this Ordinance.
   ii. No zoning permit shall be issued for development that requires large development plan approval until the designated review board has held a public meeting and approved the plan.
   iii. The review and approval of an application for large development plan approval is conducted administratively at a public hearing.
   iv. Approval of a large development plan authorizes the Building Official to accept applications for subsequent development review required by this Ordinance.

c. Authority
   i. The Planning Board reviews and approves all applications for that require large development plan approval.

d. Procedure
   i. Within sixty-five (65) days after receiving a completed application for a zoning permit that requires large development plan approval, the Planning Board must review the application and hold a public hearing.
   ii. Within forty-five (45) days of the closing of the public hearing, the Planning Board must make a decision to approve, approve with conditions, deny, or grant withdrawal the application for neighborhood development plan approval.
   iii. When considering a revision to a previously approved application for large development plan approval, the Planning Board shall limit their review to the proposed changes to the previously approved application.

e. Review Criteria
   i. The Planning Board shall approve an application for large development plan approval upon verifying that the submitted plan conforms with the provisions of this ordinance and demonstrates consistency to the following:
      a). the adopted comprehensive Master Plan of the City of Somerville and existing policy plans and standards established by the City.
      b). The purpose of this Ordinance in general;
      c). the purpose of the district where the property is located; and
      d). considerations indicated elsewhere in this Ordinance for the required large development plan approval.
   ii. The Planning Board may reject a application for LARGE DEVELOPMENT PLAN approval only when:
      a). the submittal fails to furnish adequate information required for approval;
      b). the imposition of reasonable conditions would not ensure compliance to standards, as applicable; and/or
      c). the submittal, although proper in form, includes or creates an intractable problem so intrusive on the needs of the public in one regulated aspect or another and cannot be adequately mitigated.

f. Compliance
   i. The Planning Board may require the posting of a bond or other performance guarantee to assure compliance with the LARGE DEVELOPMENT PLAN and/or conditions, as approved.

g. Conditions
   i. The Planning Board may attach conditions and/or limitations that it deems necessary in order to ensure compliance to the findings and/or standards applicable to development requiring large development plan approval.

h. Appeals
   i. Administrative Appeal
      a). An aggrieved party may appeal the decision of the Building Official according to the procedures of §10.F.2. Administrative Appeal.
      b). Administrative appeals must be filed within thirty (30) days after the filing of a decision with the Office of the City Clerk.
   ii. Judicial Appeal
      a). An aggrieved party may appeal the decision of the Planning Board according to the procedures of §10.F.3. Judicial Appeal.
      b). Judicial appeals must be filed within twenty (20) days after the filing of a decision with the Office of the City Clerk.

7. NEIGHBORHOOD DEVELOPMENT PLAN APPROVAL

a. Purpose
   i. Neighborhood development plan approval is the administrative review and approval of a plan coordinating the development of an entire new neighborhood, necessary infrastructure improvements, and regulatory & permitting decisions as development proceeds within a subject area.
   ii. The neighborhood development plan approval process provides an applicant with the opportunity to submit a plan illustrating a framework for future development without preparing detailed site plans or architectural and engineering drawings for thoroughfares, civic spaces, and/or buildings that can be approved separately at a later date as project phases and individual lots are built out.

b. Applicability
   i. Neighborhood development plan approval is only available as specifically authorized by this Ordinance.
   ii. No zoning permit shall be issued for development that requires neighborhood development plan approval until the designated review board has held a public hearing and approved the plan.
   iii. The review and approval of an application for neighborhood development plan approval is conducted administratively at a public hearing.
   iv. Approval of a neighborhood development plan authorizes the Building Official to accept applications for subsequent development review required by this Ordinance.

c. Authority
   i. The Planning Board reviews and approves all applications for that require neighborhood development plan approval.

d. Procedure
   i. Within ninety (90) days after receiving a completed application for a zoning permit that requires neighborhood development plan approval, the Planning Board must review the application and hold a public hearing.
   ii. Within ninety (90) days of the closing of the public hearing, the Planning Board must make a decision to approve, approve with conditions, deny, or grant withdrawal the application for neighborhood development plan approval.
   iii. When considering a revision to a previously approved application for neighborhood development plan approval, the Planning Board shall limit their review to the proposed changes to the previously approved application.

e. Review Criteria
   i. The Planning Board shall approve an application for neighborhood development plan approval upon verifying that the submitted plan conforms with the provisions of this ordinance and demonstrates consistency to the following:
      a). the adopted comprehensive Master Plan of the City of Somerville and existing policy plans and standards established by the City.
      b). the purpose of this Ordinance in general;
      c). the purpose of the district where the property is located; and
      d). considerations indicated elsewhere in this Ordinance for the required large development plan approval.
   ii. The Planning Board may reject an application for NEIGHBORHOOD DEVELOPMENT PLAN approval only when:
      a). the submittal fails to furnish adequate information required for approval;
      b). the imposition of reasonable conditions would not ensure compliance to standards, as applicable; and/or
      c). the submittal, although proper in form, includes or creates an intractable problem so intrusive on the needs of the public in one regulated aspect or another and cannot be adequately mitigated.

f. Compliance
   i. The Planning Board may require the posting of a bond or other performance guarantee to assure compliance with the NEIGHBORHOOD DEVELOPMENT PLAN and/or conditions, as approved.

g. Conditions
   i. The Planning Board may attach conditions and/or limitations that it deems necessary in order to ensure compliance to the findings and/or standards applicable to development requiring neighborhood development plan approval.

h. Appeals
   i. Administrative Appeal
      a). An aggrieved party may appeal the decision of the Building Official according to the procedures of §10.F.2. Administrative Appeal.
      b). Administrative appeals must be filed within thirty (30) days after the filing of a decision with the Office of the City Clerk.
   ii. Judicial Appeal
      a). An aggrieved party may appeal the decision of the Planning Board according to the procedures of §10.F.3. Judicial Appeal.
      b). Judicial appeals must be filed within twenty (20) days after the filing of a decision with the Office of the City Clerk.

8. SUBDIVISION PLAN APPROVAL

a. Purpose
   i. Subdivision plan approval certifies that a final plat plan showing the division(s) of a parcel of land into new lots and the thoroughfares that provide access to them conforms to the provisions of this Ordinance.
   ii. The subdivision plan approval process provides applicants with the opportunity to submit a preliminary plat plan to identify potential issues and the need for waivers prior to the submittal of a more detailed final plat plan.

b. Applicability
   i. No person shall subdivide any land within the City of Somerville, proceed with the improvement or sale of lots, construct thoroughfares, install utility services, or undertake preliminary site preparation, such as clearing of land or excavation, in a development site requiring subdivision plan approval until a final plat plan has been submitted to, approved, and endorsed by the designated review board and recorded in the Registry of Deeds or Land Court in accordance with the provisions of this section.
   ii. No zoning permit shall be issued for development that requires subdivision plan approval until the designated review board has held a public hearing and approved the plan.
   iii. Subdivision plan approval does not apply to lot splits, lot mergers, and lot line adjustments. Lot splits, lot mergers, and lot line adjustments require a zoning permit.
   iv. The review and approval of an application for subdivision plan approval is conducted administratively at a public hearing.
   v. A final plat plan shall not be filed with the Registry of Deeds until the review board has held a public hearing and approved the final plan.

c. Authority
   i. The Planning Board reviews and approves all applications for subdivision plan approval.

d. Procedure
   i. Subdivision plan approval is a two (2) stage process that requires the submittal of a preliminary plat plan as a prerequisite to submittal of a final plat plan.
   ii. Within forty-five (45) days after receiving a completed application for subdivision plan approval preliminary plat plan, the Planning Board must hold a public hearing, review the application, and make a decision to approve, approve with modifications, deny, or grant withdrawal the application for preliminary plat plan approval.
   iii. Within forty-five (45) days after receiving a completed application for final plat plan approval, the Planning Board must hold a public hearing and review the application.
   iv. Within twenty ninety (90) days of the closing of the public hearing, the Planning Board must make a decision to approve, approve with modifications, deny, or grant withdrawal the application for preliminary plat plan approval.
   v. When considering a revision to a previously approved application for subdivision plan approval, the Planning Board shall limit their review to the proposed changes to the previously approved application.

e. Review Criteria
   i. The Planning Board shall approve an application for subdivision plan approval upon verifying that the submitted plan conforms with the provisions of this Ordinance and demonstrates consistency to the following:
      a). the adopted comprehensive Master Plan of the City of Somerville and existing policy plans and standards established by the City.
      b). the purpose of this Ordinance in general;
      c). the purpose of the district where the property is located; and
      d). considerations indicated elsewhere in this Ordinance for the required subdivision plan approval.

f. Conditions
   i. The Planning Board may attach conditions and/or limitations that it deems necessary in order to ensure compliance to the findings and/or standards applicable to development requiring subdivision plan approval.

g. Judicial Appeal
   i. An aggrieved party may appeal the decision of the Planning Board according to the procedures of §10.F.3. Judicial Appeal.
   ii. Judicial appeals must be filed within twenty (20) days after the filing of a decision with the Office of the City Clerk.

9. PLAN REVISION

a. Purpose
   i. A plan revision petition is a request to make changes to a previously approved application for development review.

b. Applicability
   i. The initial approval or denial of an application for a plan revision is conducted administratively.

c. Authority
   i. The Director of Planning of the Mayor's Office of Strategic Planning and Community Development (hereafter referred to as "Planning Director") reviews and decides all applications for a plan revision.

d. Procedure
   i. Within fourteen (14) days after receiving a completed application for a plan revision, the Planning Director must review the application and determine if the proposed revision is de-minimus or significant enough to be considered a major amendment to the plan.
   ii. The Planning Director (Building Official?) may determine the proposed revision is de minimus upon finding that the revised plan:
      a). does not contravene the previously punished public notice, any finding, or attached condition made by the review board for the original application;
      b). does not detrimentally impact matters of substance identified in the meeting minutes of the original public meetings or public hearings;
      c). features changes that are insignificant to the degree that persons familiar with the original application would not notice a substantial change in operational or built outcome.
   iii. Upon a determination that the proposed revision is de minimus, the Planning Director will approve or deny the proposed revisions in writing. Upon denial, the applicant may appeal the decision of the Planning Director according to the procedures of §10.F.2. Administrative Appeal.
   iv. Upon a determination that the proposed revision is not de minimus, the Planning Director shall notify, in writing, the applicant and the designated review board of the determination and the applicant shall submit the proposed revisions to the designated review board as a revision to a previously approved development review application in accordance with §10.C.1. Application Submittal.
   v. When considering a revision to a previously approved development review application, review shall be limited to the changes to the previously approved application.

D. DISCRETIONARY DEVELOPMENT REVIEW

1. SPECIAL PERMIT

a. Purpose
   i. A special permit authorizes a predetermined type of exception from the provisions in this Ordinance, within specific limitations.
   ii. The special permit process
b. Applicability
   i. Special permits may only be requested as specifically authorized by this Ordinance.
   ii. No zoning permit shall be issued for development that requires or requests a special permit until the until the discretionary review process for a special permit has been completed in accordance with the provisions of this Article.
   iii. The approval or denial of an application for a special permit is discretionary.
   iv. The granting of a special permit authorizes the Building Official to issue a zoning permit.
c. Authority
   i. The Planning Board reviews and decides all applications for that require a Special Permit as follows:
      a). all development requiring a special permit in the 5MU, 7MU, and 10 MU districts;
      b). all development requiring a special permit in the Assembly Square, Innerbelt, Brickbottom, and North Point special districts;
      c). all development simultaneously applying for large development plan approval or neighborhood development plan approval; and
      d). all development subject to an approved large development plan or neighborhood development plan.
   ii. The Zoning Board of Appeals reviews and decides all applications for that require a special permit in the following circumstances:
      a). all development requiring a special permit in the NR, UR, 3MU, and 4MU districts;
      b). all development requiring a special permit in the Tufts University special district.
d. Procedure
   i. Within sixty-five (65) days after receiving a completed application for a zoning permit that requires a special permit, the designated review board must review the application and hold a public hearing.
   ii. Within ninety (90) days of the closing of the public hearing, the review board must
      a). make a decision to approve, approve with conditions, deny, or grant withdrawal the application for a special permit; and
      b). file that decision with the Office of the City Clerk.
   iii. When considering a revision to a previously approved application for a special permit, the review board shall limit their review to the proposed changes to the previously approved application.
e. Review Criteria
   i. In its discretion to approve or deny a special permit required by this Ordinance, the review board shall consider the following:
      a). conformance to the adopted master plan and other existing policy plans of the City of Somerville;
      b). consistency with the purpose of this Ordinance in general;
      c). consistency with the purpose of the district where the property is located; and
      d). considerations indicated elsewhere in this Ordinance specifically for the required special permit.
f. Compliance
   i. The review board may grant a special permit only upon making positive findings as indicated for the specific special permit requested.
g. Conditions
   i. The review board may attach conditions and/or limitations that it deems necessary in order to ensure compliance to the findings and/or standards for the specific special permit requested.
h. Permit Duration and Extension
   i. Special permits remain valid for two (2) years from the date the decision is filed with the Office of the City Clerk, excluding any time required awaiting the decision of an appeal.
   ii. The review board may reduce the time period that a special permit remains valid to a shorter time period as a condition attached to the special permit.
   iii. The review board may extend the duration of validity for a special permit upon making a finding that a demonstrated hardship has prevented utilization of the rights authorized by the special permit.
   iv. Requests for extension of the duration of validity must be submitted to the Office of the City Clerk on the appropriate forms provided by the Planning Division.
i. Judicial Appeal
   i. An aggrieved party may appeal the decision of the Zoning Board of Appeals according to the procedures of §10.F.3. Judicial Appeal.
   ii. Judicial appeals must be filed within twenty (20) days after the filing of a decision with the Office of the City Clerk.

2. URBAN DESIGN WAIVER

a. Purpose
   i. An urban design waiver allows a specifically authorized type of exception from the provisions governing blocks, lots, and/or thoroughfares in this Ordinance, within specific limitations.

b. Applicability
   i. Waivers may only be requested as specifically authorized by this Ordinance.
   ii. The approval or denial of an application for a waiver is discretionary.

c. Authority
   i. The Planning Board reviews and decides all applications that require an urban design waiver.

d. Procedure
   i. Within sixty-five (65) days after receiving a completed application for a zoning permit that requires a waiver, the Planning Board must review the application and hold a public hearing.
   ii. Within ninety (90) days of the closing of the public hearing, the review board must
      a). make a decision to approve, approve with conditions, deny, or grant withdrawal the application for a special permit; and
      b). file that decision with the Office of the City Clerk.
   iii. The granting of an urban design waiver causes specific features of development to be considered compliant to the provisions of this Ordinance.

e. Review Criteria
   i. The Planning Board may grant a waiver upon making positive findings in determining the request is:
      a). within the public interest;
      b). consistent with any waiver eligibility requirements, as indicated elsewhere in this Ordinance; and
      c). consistent with the orderly subdivision of a development site, construction of thoroughfares, or installation of utility services according to policy or standards deemed to be applicable by the Planning Board.

f. Conditions
   i. The Planning Board may attach conditions and/or limitations that it deems necessary in order to ensure compliance to the findings and/or standards for the specific special permit requested.

g. Judicial Appeal
   i. An aggrieved party may appeal the decision of the Planning Board according to the procedures of §10.F.3. Judicial Appeal.
   ii. Judicial appeals must be filed within twenty (20) days after the filing of a decision with the Office of the City Clerk.

3. VARIANCE

a. Purpose
   i. A variance authorizes a deviation from the provisions in this Ordinance.
b. Applicability
   i. No zoning permit shall be issued for development that requests a variance until the until the discretionary review process for a variance has been completed in accordance with the provisions of this Article.
   ii. The approval or denial of an application for a variance is discretionary.
   iii. Use variances are not permitted.
c. Authority
   i. The Zoning Board of Appeals reviews and decides all applications for that require a variance.
d. Procedure
   i. Within sixty-five (65) days after receiving a completed application for a zoning permit that requires a variance, the Zoning Board of Appeals must review the application and hold a public hearing.
   ii. Within one hundred (100) days of the closing of the public hearing, the Zoning Board of Appeals must make a decision to approve, approve with conditions, deny, or grant withdrawal the application for a variance.
   iii. Within fourteen (14) days of making a decision, the Zoning Board of Appeals must file the decision and record of the proceedings of the public hearing with the Office of the City Clerk.
e. Review Criteria
   i. The Zoning Board of Appeals may only grant a variance upon finding that all of the following factors are met:
      a). Special circumstances exist relating to the soil conditions, shape, or topography of a parcel of land or the unusual character of an existing structure but not affecting generally the zoning district in which the land or structure is located;
      b). Literal enforcement of the provision of this Ordinance for the district where the subject land or structure is located would involve substantial hardship, financial or otherwise, to the petitioner or appellant due to said special circumstances; and
      c). Desirable relief could be granted without causing substantial detriment to the public good and without nullifying or substantially derogating from the intent and purpose of a specific district in this Ordinance or the Ordinance in general.
f. Conditions
   i. The Zoning Board of Appeals may attach conditions and/or limitations it deems necessary in order to ensure compliance to the findings and/or standards for the specific variance requested.
g. Duration and Extension
   i. Variances remain valid for one (1) year from the date the decision is made by the Zoning Board of Appeals, not the date that the decision is filed with the Office of the City Clerk, excluding any time required awaiting the decision of an appeal.
   ii. Upon written request by an applicant, the Zoning Board of Appeals may, in its discretion, extend the time period that a variance remains valid for up to six (6) months.
   iii. Requests for extension of a variance must be submitted to the Office of the City Clerk on the appropriate forms provided by the Planning Division.
h. Judicial Appeal
   i. An aggrieved party may appeal the decision of the Zoning Board of Appeals according to the procedures of §10.F.3. Judicial Appeal.
   ii. Judicial appeals must be filed within twenty (20) days after the filing of a decision with the Office of the City Clerk.

E. LEGISLATIVE PROCEDURES

1. LAND CONVEYANCE

a. Purpose
   i. A land conveyance petition is a request for the City to accept a voluntary offering of land for public dedication.

b. Applicability
   i. The approval or denial of a land conveyance petition is a discretionary legislative act, subject to the procedures of M.G.L 30B and other Massachusetts law.

c. Authority
   i. The Board of Aldermen reviews and decides all land conveyance petitions.

d. Procedure
   i. Within fourteen (14) days of receiving a land conveyance petition, the Board of Aldermen must submit the petition and accompanying plan documentation to the Planning Board for review.
   ii. Within sixty-five (65) days after submittal to the Planning Board, the Board of Aldermen must review the petition and hold a public hearing.
   iii. Within ninety (90) days of the closing of the public hearing, the Board of Aldermen must vote to accept or reject the petition to convey the voluntary offering of land for public dedication.
   iv. The Board of Aldermen shall abstain from taking a vote until:
      a). the Planning Board has submitted a report with recommendations concerning the petition; or
      b). twenty-one (21) days after the closing of the public hearing without the Planning Board submitting its report.
   v. A two-thirds vote by all of the members of the Board of Aldermen is required to accept a voluntary offering of land for public dedication.

e. Recommendation
   i. In developing its recommendation to the Board of Aldermen, the Planning Board shall consider the following:
      a). the adopted comprehensive Master Plan of the City of Somerville and existing policy, plans, and standards established by the City, including the Open Space & Recreation Plan.
      b). the purpose of the district where the property is located and of this Ordinance in general.
      c). any demonstrated public interest in ownership and the assumption of maintenance responsibility for the land in question.

f. Conditions
   i. The Planning Board may make recommendations to the Board of Aldermen for conditions that it deems within the public interest in accepting a petition to convey land to the City of Somerville.

2. ZONING TEXT AMENDMENT

a. Purpose
   i. A text amendment petition is a request to change the regulations of in response to changes in City policy or real world conditions.
b. Applicability
   i. The approval or denial of a zoning text amendment is a discretionary legislative act.
c. Authority
   i. The Board of Aldermen reviews and decides petitions to amend this Ordinance.
d. Procedure
   i. Petitions may be submitted by:
      a). any member(s) of the Board of Aldermen;
      b). the Mayor;
      c). the Zoning Board of Appeals;
      d). the Planning Board;
      e). a property owner seeking to change the entitlement of his/her own property; and
      f). ten (10) registered voters in the City of Somerville.
   ii. Within fourteen (14) days of receiving a petition to amend the text of this Ordinance, the Board of Aldermen must submit the petition and the proposed changes, additions, or repeal of language to the Planning Board for review.
   iii. Within sixty-five (65) days after submittal to the Planning Board, the Board of Aldermen must review the petition and hold a public hearing.
   iv. Within ninety (90) days of the closing of the public hearing, the Board of Aldermen must vote to adopt, reject, or amend and adopt the text amendment petition.
   v. The Board of Aldermen shall abstain from taking a vote until:
      a). the Planning Board has submitted a report with recommendations concerning the petition; or
      b). twenty-one (21) days after the closing of the public hearing without the Planning Board submitting their report.
   vi. A two-thirds vote by all of the members of the Board of Aldermen is required to amend the text of this Ordinance.
   vii. A three-fourths vote by all of the members of the Board of Aldermen is required upon written request by:
      a). twenty (20) percent or more of the property owners of the land area affected by the proposed amendment; or
      b). twenty (20) percent or more of the property owners within three hundred (300) feet of the land area affected by the proposed amendment.
   viii. Proposed amendments that are denied by the Board of Aldermen will not be reconsidered for a minimum of two (2) years from the date final action was taken by the Board, unless the proposed amendment is supported by a positive recommendation from the Planning Board.
e. Recommendation
   i. In developing its recommendation to the Board of Aldermen, the Planning Board shall consider the following:
      a). the adopted comprehensive Master Plan of the City of Somerville and existing policy plans and standards established by the City, including the Open Space & Recreation Plan.
      b). the purpose of the district where the property is located and of this Ordinance in general.
      c). any demonstrated public interest in ownership and the assumption of maintenance responsibility for the land in question.

3. ZONING MAP AMENDMENT

a. Purpose
   i. A map amendment petition is a request to change how zoning districts are mapped over real property in response to changes in City policy or real world conditions.

b. Applicability
   i. The approval or denial of a zoning map amendment is a discretionary legislative act.

c. Authority
   i. The Board of Aldermen reviews and decides petitions to amend the Official Zoning Map.

d. Procedure
   i. ~~Petitions to amend the zoning map must be submitted in accordance with Section 10.A.1. Application Submittal.~~
   ii. Petitions may be submitted by:
      a). any member(s) of the Board of Aldermen;
      b). the Mayor;
      c). the Zoning Board of Appeals;
      d). the Planning Board;
      e). a property owner seeking to change the entitlement of his/her own property; and
      f). ten (10) registered voters in the City of Somerville.
   iii. Within fourteen (14) days of receiving a petition to amend the Official Zoning Map, the Board of Aldermen must submit the petition and the proposed changes, additions, or repeal of language to the Planning Board for review.
   iv. Within sixty-five (65) days after submittal to the Planning Board, the Board of Aldermen must review the petition and hold a public hearing.
   v. Within ninety (90) days of the closing of the public hearing, the Board of Aldermen must vote to adopt, reject, or amend and adopt the map amendment petition.
   vi. The Board of Aldermen shall abstain from taking a vote until:
      a). the Planning Board has submitted a report with recommendations concerning the petition; or
      b). twenty-one (21) days after the closing of the public hearing without the Planning Board submitting its report.
   vii. A two-thirds vote by all of the members of the Board of Aldermen is required to amend the Official Zoning Map.
   viii. A three-fourths vote by all of the members of the Board of Aldermen is required upon written request by:
      a). twenty (20) percent or more of the property owners of the land area included in the proposed map change; or
      b). twenty (20) percent or more of the property owners within three hundred (300) feet of the land area included in the proposed map change.
   ix. Proposed amendments that are denied by the Board of Aldermen will not be reconsidered for a minimum of two (2) years from the date final action was taken by the Board, unless the proposed amendment is supported by a positive recommendation from the Planning Board.

e. Recommendation
   i. In developing its recommendation to the Board of Aldermen, the Planning Board shall consider the following:
      a). the adopted comprehensive Master Plan of the City of Somerville and existing policy plans and standards established by the City;
      b). the purpose of this Ordinance in general; and
      c). the intent and purpose of the district(s) that would be applied to the properties in question.

F. APPEALS

1. BUILDING CODE APPEAL

a. Purpose
   i. A building code appeal is a petition to rectify an interpretation, order, requirement, direction, or failure to act by the Building Official when an alleged error or misinterpretation has been made in the enforcement or application of the State Building Code (780 CMR).

b. Authority
   i. The State Building Code Appeals Board reviews and decides building code appeals.

c. Procedure
   i. Building code appeals must be filed with the State Building Code Appeal Board in accordance with the procedures set forth in M.G.L. Title XX, Chapter 143, Section 100, as amended.

2. ADMINISTRATIVE APPEAL

a. Purpose
   i. An administrative appeal is a petition to rectify a failure to act, denial of a permit, decision made, or enforcement action taken by the building official or planning board in an administrative development review case when an alleged error or misinterpretation has been made in the enforcement or application of the provisions of this Ordinance.

b. Applicability
   i. Any aggrieved party may appeal an interpretation, order, requirement, direction, or failure to act by the Building Official within thirty (30) days or such action or failure to act.

c. Authority
   i. The Zoning Board of Appeals reviews and decides all administrative appeals.

d. Procedure
   i. ~~Administrative appeals must be submitted in accordance with §10.A.1.1. Application Submittal.~~
   ii. Within sixty-five (65) days after receiving a completed application for an administrative appeal, the designated review board must review the application and hold a public hearing.
   iii. Within one hundred (100) days of the closing of the public hearing, the Zoning Board of Appeals must make a decision to uphold or reverse the decision of the Building Official or Planning Board.
   iv. Within fourteen (14) days of making a decision, the Zoning Board of Appeals must file the decision and record of the proceedings of the public hearing with the Office of the City Clerk.

e. Judicial Appeal
   i. An aggrieved party may appeal the decision of the Zoning Board of Appeals according to the procedures of §10.F.3. Judicial Appeal.

3. JUDICIAL APPEAL

a. Purpose
   i. A judicial appeal is a petition to rectify the failure to act, denial of a permit, decision made, or enforcement action taken by a review board in a discretionary development review case when an alleged error or misinterpretation has been made in the enforcement or application of the provisions of this Ordinance.

b. Jurisdiction
   i. Judicial appeals can be filed per MGL 40A, Sec. 17.

G. REVIEW BOARDS & OFFICIALS

1. BUILDING OFFICIAL

a. Responsibilities
   i. The Superintendent of Inspectional Services or their designee (hereafter referred to as "Building Official") is the enforcement authority for this Ordinance.
   ii. The Building Official may issue any enforcement order, violation notice, request for compliance, or other correspondence as necessary and institute any appropriate inspection, action, or proceeding in the name of the City of Somerville to:
      a). prevent the unlawful erection, relocation, extension, enlargement, or alteration of any structure or sign;
      b). prevent the unlawful use or occupancy of real property;
      c). prevent any illegal act, business, or use in or about any premises; and
      d). prevent, correct, restrain, or abate violations of this Ordinance.
   iii. The Building Official establishes application forms, fees, and requirements for development review in collaboration with the Planning Director.

b. Enforcement Actions
   i. The Building Official shall not issue any written interpretation, zoning permit, building permit, or certificate of occupancy in violation of this Ordinance.
   ii. Any written interpretation, zoning permit, building permit, or certificate of occupancy may be revoked upon finding any material misstatement of fact or misrepresentation in plans or specifications by the applicant.
   iii. The Building Official, upon finding evidence of violation of this Ordinance shall give written notice to the property owner and/or occupant of said property demanding such violation be corrected or abated within such time as the Building Official deems appropriate.
   iv. The Building Official shall revoke any existing certificate of occupancy or building permit already in effect for any property that is in violation of this Ordinance if that violation is not corrected or abated within the required time period.
   v. Nothing in this Ordinance shall restrict the City from seeking immediate equitable relief for a violation of this Ordinance from a court of competent jurisdiction without prior notice.

c. Fines and Penalties
   i. Any person who violates the provisions of this Ordinance shall be punished with a fine of not more than three hundred dollars ($300.00) for each offense, where each day that a violation is not corrected or abated shall constitute a separate offense.
   ii. In addition to procedures for enforcement described above, the Building Official may enforce the ordinance by a non-criminal disposition per MGL 4021d.

2. ZONING BOARD OF APPEALS

a. Responsibilities
   i. The Zoning Board of Appeals reviews and decides all applications for a variance.
   ii. The Zoning Board of Appeals reviews and decides all application for an administrative appeal.
   iii. The Zoning Board of Appeals reviews and decides applications for Special Permits and Site Development Plans as indicated elsewhere in this Ordinance.

b. Board Rules
   i. The Zoning Board of Appeals and may adopt rules of procedure and policy as it may deem necessary to conduct its affairs, including but not limited to the following subjects:
      a). rules and procedures governing applications and fees, including required written and graphical information;
      b). rules and procedures governing the administrative compliance of zoning requirements;
   ii. The adoption or amendment of rules of procedure and policy is conducted administratively at a public meeting.

3. PLANNING BOARD

a. Responsibilities
   i. The Planning Board reviews and decides applications for Special Permits and Site Development Plans as indicated elsewhere in this Ordinance.
   ii. The Planning Board reviews and approves all applications for large development plan approval.
   iii. The Planning Board reviews and approves all applications for neighborhood development plan approval.
   iv. The Planning Board reviews and decides all applications for an urban design waiver.
   v. The Planning Board provides advice and recommendations to the Board of Aldermen concerning the following:
      a). proposed amendments to the text or maps of the Somerville Zoning Ordinance;
      b). proposed changes to the official map of the City of Somerville; and
      c). the laying out, alteration, relocation, or discontinuance of public ways and statutory private ways; and
      d). the proposed conveyance of land to the City.
   vi. The Planning Board, or its designee, is responsible for the authoring and periodically update of the master plan for the City of Somerville, and its subsequent adoption.
   vii. The Planning Board, or its designee, drafts the official map of the City of Somerville.

b. Board Rules
   i. The Planning Board and may adopt rules of procedure and policy as it may deem necessary to conduct its affairs, including but not limited to the following subjects:
      a). rules and procedures governing applications and fees, including required written and graphical information;
      b). rules and procedures pertaining to the development review process;
      c). rules and procedures governing the administrative compliance of zoning requirements;
      d). rules and procedures for subdivision, lot splits, lot mergers, and lot line adjustments.
   ii. The adoption or amendment of rules of procedure and policy is conducted administratively at a public meeting.

4. URBAN DESIGN COMMISSION

a. Responsibilities

i. The Urban Design Commission provides advice and recommendations to the Zoning Board of Appeals and Planning Board concerning how the design of development projects affects the quality of Somerville's public realm, the urban environment visible and accessible to the public inclusive of both spaces and the building walls that frame them.

5. PLANNING DIRECTOR

a. Responsibilities

i. The Director of Planning or their designee (hereafter referred to as "Planning Director") ensures that development review is completed by review boards in accordance with the provisions of this Ordinance.

ii. The Planning Director coordinates public notice as required by the provisions of this Ordinance.

iii. The Planning Director establishes application forms, fees, and requirements for development review in collaboration with the Building Official.

iv. The Planning Director completes a staff report for any development review application that requires additional development review before a review board or legislative procedure petitions submitted to the Board of Aldermen.

v. The Planning Director establishes the rules of procedure for design review by the Urban Design Commission

vi. The Planning Director completes administrative functions of the Review Boards as authorized through the Rules and Regulations of the Boards

vii. The Planning Director serves as the designee of the Planning Board in coordinating updates to the comprehensive Master Plan of the City.

ARTICLE 11: NONCONFORMANCE

NONCONFORMANCE.....291
General 291
Nonconforming Uses 291
Nonconforming Structures 291
Nonconforming Site Characteristics 292
Nonconforming Lots 292
Nonconforming Signs 292
Casualty 292
Abandonment 292
Infectious invalidity 293

A. NONCONFORMANCE

1. GENERAL

a. Applicability
   i. The alteration, expansion, reconstruction, extension, or structural change (hereafter referred to as "alteration") of a lawfully nonconforming use, structure, site characteristic, lot, and/or sign must comply with the provisions of this section.

b. Authority to Continue
   i. Any use, structure, site characteristic, lot, sign that was lawfully established prior to and has been made nonconforming as of the first publication of the public notice for the public hearing for this Ordinance, or any amendment to this Ordinance, may continue as lawfully nonconforming so long as the nonconformity remains otherwise lawful.
   ii. Any rights conferred upon a lawful nonconformity run with the property and are not affected by changes in tenancy or ownership.

c. Proof of Lawful Nonconformance
   i. The burden of establishing the prior existence of a lawful nonconformity is on the applicant. When applying for development review involving a lawful nonconformity, the Building Official may require the applicant to submit evidence of a prior permit or other documentation showing that the lawful nonconformity existed prior to the date on which it became lawfully nonconforming.

2. NONCONFORMING USES

a. Alteration
   i. Any alteration to a lawfully existing nonconforming use may be permitted if granted a special permit by the appropriate review board in the following circumstances:
      a). the alteration is not substantially more detrimental to the neighborhood than the existing degree of nonconformity.
   ii. A nonconforming use is considered to be altered in, but not limited to, the following circumstances:
      a). any increase in gross floor area;
      b). any increase in the number of dwelling units;
      c). a change from seasonal to full-time operation; and,
      d). any substantial increase in the number of automobile trips generated by the use.

b. Change in Use
   i. A lawfully existing nonconforming use of real property may change to a permitted use as indicated for the district where the property is located (see Article 5: Use Provisions).
   ii. The change in use of a lawfully existing nonconforming use of real property to a different nonconforming use within the same Use Category as the existing nonconforming use requires a Special Permit according to the provisions of §10.D.1. Special Permit.
      a). In its discretion to approve or deny a special permit authorizing a change is use of a lawfully existing nonconforming use of real property to a different nonconforming use within the same Use Category as the existing nonconforming use, the review board must consider the following:
         i). The extent and nature of the proposed alteration;
         ii). The ability of conforming alterations to meet the demonstrated need of the Applicant;
         iii). Consistency of the proposed alterations with the evolution of neighboring structures.
         iv). Establishment of permeable lot surface, to the maximum extent possible.
         v). Conformance to design guidelines in this Ordinance.
      b). The review board shall not grant a special permit authorizing a change in use of a lawfully existing nonconforming use of real property to a different nonconforming use, within the same Use Category as the existing nonconforming use, without finding that the alteration is not substantially more detrimental to the neighborhood than the existing use.
   iii. A lawfully existing nonconforming use of real property is not permitted to change to a different nonconforming use from a different Use Category than the existing nonconforming use.

3. NONCONFORMING STRUCTURES

a. Ordinary Repair and Maintenance
   i. Normal maintenance, painting, roof replacement, and other improvement deemed to be cosmetic in nature by the Building Official is permitted but may need to meet other requirements outside of this Ordinance.
   ii. Interior renovations ~~of a permitted use~~ within a nonconforming structure are not considered an alteration.

b. Alteration
   i. Any alteration to an existing building that creates a new nonconformity is prohibited.
   ii. Any alteration to an existing nonconforming structure that does not alter the nonconforming nature of the structure, create a new nonconformity, reduce the level of nonconformity, or is determined as not substantially more detrimental to the neighborhood requires only a Zoning Permit. See §10.C.1. Zoning Permit for more information.
   iii. The Building Official shall find that the installation or relocation of fenestration that maintains conformance the fenestration requirements of this Ordinance is not substantially more detrimental to the neighborhood and is permitted.
   iv. The Building Official shall find that construction of the following building frontage types are not substantially more detrimental than existing nonconformities when those frontage types are conforming to the provisions of §3.D. Building Components:
      a). Stoop
      b). Portico
      c). Porch, Projecting

d). Porch, Engaged

v. Alterations to an existing nonconforming structure are not permitted, when the alteration will:
   a). Increase the building height in feet or stories above the height limit for the tallest permitted building type in the zoning district.
   b). Increase building height for any portion of a building located within a required setback.
   c). Increase the number of dwelling units beyond the maximum permitted for each building type.
   d). Increase the number of dwelling units beyond above three (3) in any building in an NR district.
   e). Reduce the average dwelling unit size below the permitted average dwelling unit size.

vi. The Building Official shall find that construction of the following building components are not substantially more detrimental than existing nonconformities when those components are conforming to the provisions of §3.D. Building Components:
   a). Awning
   b). Entry Canopy
   c). Bay
   d). Deck
   e). Dormer Window
   f). Side Wing
   g). Rear Addition

vii. Any other alteration to an existing nonconforming structure that increases the degree of an existing nonconformity of a structure requires a Special Permit according to the provisions of §10.D.1. Special Permit.
   a). In its discretion to approve or deny a special permit authorizing an alteration to a nonconforming structure that increases the degree of an existing nonconformity of the structure, the review board must consider the following:
      i). The extent and nature of the proposed alteration;
      ii). The ability of conforming alterations to meet the demonstrated need of the Applicant;
      iii). Consistency of the proposed alterations with the evolution of neighboring structures.
      iv). Establishment of permeable lot surface, to the maximum extent possible.
      v). Conformance to design guidelines in this Ordinance.
   b). The review board shall not grant a special permit authorizing an alteration to an existing nonconforming structure that increases the degree of an existing nonconformity of the structure without finding that the alteration is not substantially more detrimental to the neighborhood.

egree
Permit
ermit.

4. NONCONFORMING SITE CHARACTERISTICS

a. Immunity
   i. Nonconforming site characteristics, including parking and permeable area requirements, do not cause uses or structures that are otherwise conforming to the provisions of this Ordinance to become nonconforming.

b. Alterations
   i. Nonconforming parking lots cannot be expanded in violation or further violation of maximum parking requirements.
   ii. Nonconforming landscape and permeable area cannot be further reduced.

c. Improvement
   i. Review boards may require nonconforming site characteristics to be brought into conformance with the provisions of this Ordinance as a condition applied to the approval of an application for development review as authorized for each type of development review (see §B.§10.C.1. Zoning Permit through §10.D.3. Variance).

5. NONCONFORMING LOTS

a. Vacant lots with a dimension smaller than the corresponding dimension of all allowed building types in a zoning district are unbuildable.

6. NONCONFORMING SIGNS

a. A nonconforming sign may alter content, but may not:
   i. Be replaced with a sign that is larger in any dimension than the existing sign;
   ii. Alter lighting technology, except to bring the technology into compliance with the ordinance.

b. No establishment with a nonconforming sign may add additional signs without bringing nonconforming signs into compliance.

7. CASUALTY

a. Lawfully existing nonconforming real property destroyed by fire, explosion, weather, flooding, or act of public enemy can be reconstructed or restored by-right and requires only a zoning permit subject to the following:
   i. there shall be no alteration to the degree of nonconformity from the state existing prior to destruction;
   ii. reconstruction or restoration shall be started within a period of two (2) years of the date of destruction and shall be continued in a timely fashion until completed.

b. No building permit shall be issued until a zoning permit has been granted by the Building Official.

8. ABANDONMENT

a. Lawfully existing nonconforming real property is considered abandoned when one or more of the following conditions exist:
   i. the use is changed to a use permitted in the district where the property is located;
   ii. the use is changed to a use protected under MGL 40A, Section 3;
   iii. the use is discontinued, whether temporarily or permanently, with or without intent to abandon, for a period of two (2) years or more;
   iv. equipment or furnishings necessary for the operation of the nonconforming use have been removed and not replace for a period of one (1) year

or more or more;

v. utilities, such as water, gas, or electricity to the property have been disconnected for over one (1) year; and/or

vi. reconstruction or restoration does not start within a period of two (2) years from the date of destruction of lawfully existing nonconforming real property.

b. Nonconforming real property that has been abandoned shall not be reestablished or resumed until brought into conformance with this Ordinance.

9. INFECTIOUS INVALIDITY

a. A lot split, lot merger, or lot line adjustment, or subdivision that would result in a new nonconformity is prohibited.

b. This provision shall not apply when a lot is divided for any public purpose.

ARTICLE 12: MEASUREMENT & DEFINITIONS

MEASUREMENT 275
Reserved 275

DEFINITIONS 275

A. MEASUREMENT

1. RESERVED

B. DEFINITIONS

A

Abut or Abutting To physically touch or share a contiguous boundary or border, such as a common lot line, or to be separated only by an alley or shared driveway.

Abutter, Direct The owner of a property that abuts a subject property

Access The way or means to enter and leave property.

Accessory Structure Any structure designed, arranged, used, or occupied per the provisons of Artcile 6.B.

Accessory Use A use(s) of a lot, structure or portion thereof that is incidental and related to a principal building or use of land and located on the same lot as the principal building or use of land.

Adjacent See abut or abutting

Affordable Dwelling Unit A dwelling unit sold or rented at prices affordable to persons of low or moderate income. (see Article X)

Agricultural A use principally engaged in raising, harvesting and storing crops; feeding or managing livestock; or producing plants, trees, fowl, and other animals for ultimate disposition in the form of a product for human use.

Agriculture, Urban An umbrella term that describes a range of food growing practices that may include apiculture (bee keeping) and /or aviculture (raising chickens), but does not include raising other kinds of livestock.

Albedo The amount of solar radiation reflected by a surface.

Allee Objects placed in a straight line.

Alley A thoroughfare, located internal to a block and providing access to the rear of buildings, loading facilities, service areas, trash storage, motor vehicle parking, and usually containing easements for dry utilities.

Alteration As applied to a building or structure, a change or rearrangement in the exterior structural parts or in the exit facilities; also an enlargement or addition where new construction is connected to an existing structure, whether by extending on a side or by increasing in height, or the moving from one (1) location or position to another.

Amenity Space, Private Features of a building and/or outdoor areas designed for the comfort and/or convenience of residents.

Amenity Space, Shared Rooms and/or facilities designed for the comfort and/or convenience of residents of a multi-unit building.

Ancillary Providing necessary support for the operation of a principal use.

Annual Sunlight Exposure (ASE) A calculation of the percentage of floor area of an interior space that receives a specified level of luminance for at least 250 hours of the time that the space is occupied on an annual basis.

Antenna Equipment for wireless communication, including but not limited to panel antennas, whip antennas, and satellite dishes.

Antenna, Freestanding An antenna that is not attached to a building or other structure other than those designed to hold the antenna.

Antenna, Interior-mounted An antenna mounted on the interior of a structure such as a steeple, belfry, cupola, or other tower or rooftop element.

Antenna, Side-mounted An antenna fastened to the face of a building, penthouse, smokestack, or chimney, to conceal its presence and reduce its visual impact.

Apartment Building A large floor plate, multi-story, residential building type with more than six dwelling units.

Apartment House A moderate floor plate, detached, residential building type with six to ten dwelling units designed to appear as a large house.

Applicant A person or entity who has submitted an application for review under applicable provisions of this Ordinance.

Aquaculture The farming of aquatic organisms such as fish, crustaceans, molluscs, and aquatic plants.

Aquaponics The production of food using conventional aquaculture with hydroponics in a symbiotic environment.

Arbor A structure with an open frame, freestanding or attached to another structure, with horizontal or vertical latticework often used as a support for ornamental vines and/or

climbing plants.

Artist Studio Space Floorspace used for the creation, production, rehearsal, or teaching of any visual art or craft, including but not limited to painting, drawing, graphic design, photography, video, film, sculpture, and pottery; of written works of fiction or nonfiction; or of any performing art, whether for live or recorded performance, including music, dance, and theater, and accessory sales of such art.

Arts Center A multi-purpose facility dedicated to the expansion and practice of the arts by providing recourses such as theatre space, gallery space, musical performance venues, workshop areas, educational facilities, or access to equipment to members of the community.

Assembly Square Plan The following documents, as amended, constitute the Assembly Square Plan:

a). Assembly Square Planning Study: A Vision and Implementation Plan for the Future, prepared for the Somerville Office of Housing and Community Development (OHCD), dated October 2000;

b). Assembly Square Revitalization Plan: 2002 Major Plan Change, prepared by the Somerville OHCD, dated May 2002;

c). Assembly Square: Design Guidelines for the Public Realm, prepared for the Somerville OHCD, dated March 2002;

d). Assembly Square Transportation Plan (ASTP), prepared for the Somerville OHCD in conjunction with the Commonwealth of Massachusetts Highway Department and the Executive Office of Transportation and Construction, dated May 2003.

Attic The non-habitable interior space located directly under a pitched roof of a building.

Average Ground Level The mean (average) ground level at the corners of the main body of a building type.

Awning A wall mounted, pitched covering extending from a building to provide shade and weather protection for pedestrians

B

Basement A story of a building that is, in whole or in part, below the ground story.

Bay, Architectural An area of a facade between two buttresses, pilasters, columns, piers, or other equivalent architectural features.

Bay, Window A window assembly extending from the main body of a building to permit increased light, and multi-directional views, and to articulate a building facade.

Bedroom A private room for sleeping, however named, planned, intended or used, which is separated and can be closed off from other parts of the dwelling by walls and a door.

Blade Sign A small, two-sided sign that is attached to and projects perpendicularly from the facade of a building that identifies a commercial establishment. See §6.G.

Blank Wall A portion of any facade of a building that does not include a substantial material change; windows, doors, columns, pilasters or other articulation greater than twelve (12) inches in depth.

Block The aggregate land area circumscribed by thoroughfares or other rights-of-way.

Block Face The aggregate of all front lot lines, and alleys, if present, on one side of a block.

Board of Appeals The Somerville Zoning Board of Appeals. See §10.G.

Boarding Room A room designed or occupied as a separate living facility for one (1) person, with sleeping facilities but without both individual cooking and sanitary facilities (e.g. the room may have cooking facilities but not a bathroom, or vice versa).

Build-to Line A maximum, parallel distance recessed from a front lot line where a building facade must be built and established as the maximum front setback.

Building Any structure, either temporary or permanent, having a roof or other covering, and designed or used for the shelter or enclosure of any person, animal, or property of any kind, including tents, awnings, or vehicles situated on private property and used for purposes of a building.

Building Official The Superintendent of Inspectional Services, Senior Building Inspector, Local Building Inspector, Zoning Officer, or other person designated to enforce this Ordinance.

Building Type A classification or kind of structure characterized and differentiated by its placement on a lot, massing, composition, use, and features.

By Right (or "As of Right") Uses and structures permitted in a zoning district that require a zoning permit and do not require discretionary development review.

C

Caliper A measurement of the diameter of a tree trunk. For trees less than four (4) inches in diameter, caliper is measured six (6) inches from the ground. For trees between four (4) inches and twelve (12) inches in diameter, caliper is measured twelve (12) inches from the ground.

Canopy The extent of the outer layer of leaves of an individual tree or group of trees.

Canopy Density The general permeability of a tree canopy to light as a characteristic of branch number and structure. Canopy density can either be full (> 50%) or open (< 50%).

Canopy Shape The general shape of the outer layer of leaves of an individual tree as structured by the tree's branches.

Carport A roofed structure, unenclosed on two (2) or more sides, used or designed for the off-street parking of motor vehicles.

Cellar See "Basement."

Change in Use A change in the use of real property, whether temporary or permanent, from one use subcategory to a different use subcategory as defined by Article 5. Use Provisions.

Chicken A common domestic chicken (Gallus gallus domesticus).

Civic Space An outdoor open space designed for to support social and recreational activities. Civic space types are defined by the combination of certain characteristics, including the interrelationship between intended use, size, landscaping, and abutting uses.

Clearance The height above the sidewalk or other surface, as specified, of the bottom edge of an object or building component.

Close A one-way thoroughfare surrounding a civic space providing vehicular access to abutting lots.

Cold Frame An unheated outdoor structure built close to the ground, typically consisting of, but not limited to, a wooden or concrete frame and a top of grass or clear plastic used for protecting seedlings and plants from cold weather.

Commercial A term collectively defining permitted uses from all non-residential use categories, excluding auto-oriented uses.

Commercial Building A multi-story building type with ground story commercial uses and upper story non-residential uses.

Commercial High-Rise A high-rise building type limited to non-residential uses.

Corridor Building A residential building type composed of apartments/condos down one or both sides of a central hallway.

Cost Burden When a household pays more than thirty percent (30%) of its income for housing.

Cottage A small floor plate, detached, residential building type with one dwelling unit.

Creative Incubator An organization providing startup and early-stage arts and creative enterprises with shared facilities and often providing business planning, access to finance, mentoring, and other business or administrative support services.

Culinary Incubator An organization providing start-up catering, retail, and wholesale food businesses with shared kitchen facilities and often providing business planning, access to finance, mentoring, and other business or administrative support services.

Cultivar A cultivated variety of Street Tree; deliberately selected for its desirable physical characteristics.

D

Daylight Factor A measurement for the amount of daylight received from the outside in an interior space of a building, calculated as a ratio of the unshaded exterior illuminance on a horizontal plane, under a fully overcast sky, over interior illuminance on a horizontal plane. The higher the daylight factor, the more natural light is available in the room.

Deck A roofless, raised platform accessible from a secondary entrance to a building that provides outdoor amenity space. .

Design & Fabrication Center A facility providing individuals and small firms access to professional manufacturing tools & equipment; classes & training; lab, workshop, and studio space; and storage for tools and supplies.

Desire Line A route that pedestrians prefer to take to get from one location to another.

Developer The legal or beneficial owner(s) of a lot or land included in a proposed development, including the holder of an option or contract to purchase, or any other person having an enforceable proprietary interest in such land.

Development The construction, reconstruction, alteration, expansion, reconstruction, extension, relocation, or enlargement of any building or structure; excavation, land fill, or mining; any use or change in use of any building or structure or land; or any expansion in the

use of land.

Development Site The land area encompassed in a development proposal irrespective of the number or configuration of lots, land ownership, and/or municipal boundaries.

Diameter at Breast Height (DBH) A standard measurement of the diameter of a tree trunk of an existing tree measured four and one-half (4.5) feet above ground.

Dog Park A civic space type designed for the recreation of dogs and their owners.

Dormer Window A window or set of windows that projects vertically from a sloped roof designed to provide light into and expand the habitable space of a half-story.

Dormitory Residential housing exclusively occupied by full- or part-time students and/or educational staff and owned or operated by an educational institution.

Duplex A moderate floor plate, detached, residential building type with two side by side dwelling units.

Dwelling A building or portion of a building designed or used as living quarters containing one (1) or more dwelling units.

Dwelling, Detached A dwelling which is designed to be and is substantially separate from any other structure or structures except accessory buildings.

Dwelling, Multiple A residential building intended and designed to be occupied by four (4) or more families, where each of the units or any portion thereof must be above or below at least one of the other units.

Dwelling Unit A single unit providing complete, independent living facilities containing one (1) or more rooms arranged for use by no more than four (4) unrelated individuals living together as a single housekeeping unit with cooking, living, sanitary, and sleeping facilities.

E

Easement A liberty, privilege, or advantage without profit, which a person(s) may have in the lands of another person(s).

Elevation Height relative to mean sea level.

Employer A person or business that employs one or more people for wages or salary.

Encroach To break the plane of a vertical or horizontal regulatory limit with a structural element, so that it extends into a setback or over the sidewalk of a public right-of-way.

Encroachment Any structural element that encroaches.

Erect To construct, reconstruct, excavate, fill, drain, or conduct physical operations of any kind in preparation for or in pursuance of construction or reconstruction, or to move a building or structure upon a lot.

Essential Services Utility services erected, constructed, altered, or maintained by public utilities or municipal departments or commissions, including underground or overhead gas, electrical, steam or water transmission or distribution systems, collection, communication, supply or disposal systems, including poles, wires, mains, drains, sewers, pipes, conduits, cables, fire alarm boxes, police call boxes, traffic signals, hydrants, and other similar equipment and accessories in connection therewith, but not including buildings reasonably necessary for the furnishing of adequate service by such public utilities or municipal departments or commissions or for the public health or safety or general welfare.

F

Fabrication Laboratory A high-tech workshop that fosters innovation and invention by providing individuals with access to tools and machinery for "do-it-yourself" (DIY) digital fabrication.

Fabrication Loft A moderate to large floor plate, multi-story building type subdivided for multiple tenants, often designed with tall ceilings, expansive windows, wide corridors, and service elevators.

Facade The exterior wall of a building oriented in whole or in part toward a front lot line, civic space, or on-site open space with frontage on a thoroughfare.

Facade Build-out The minimum width a facade must be built within a setback area or in relation to a build-to line.

Farm Stand A temporary structure for the display and sale of clean, whole, unprocessed produce, eggs, or honey cultivated on site.

Fenestration The arrangement, proportioning, and design of openings in the facade of a building, including windows and doors, but excluding entrances and doors for parking, loading,

and service facilities.

Floor Area, Gross The sum area of all floors or accessible levels of a building as measured to the perimeter of the exterior faces of the walls with no deduction for corridors, stairs, closets, thickness of walls, columns or other features.

Floor Area, Gross Leaseable Gross floor area included in a commercial lease.

Floor Area, Net The sum area of all floors or accessible levels of a building as measured to the perimeter of the exterior faces of the walls, including enclosed porches, but excluding areas used for accessory garage purposes, basement and cellar areas devoted exclusively to storage and mechanical uses accessory to the operation of the building, off-street loading facilities, malls, plazas, elevator shafts, escalators, stairways and stair landings, and those areas used for the storage, operation, or maintenance of mechanical equipment such as air conditioning and heating apparatus.

Floor Plate The total gross floor area of a single story of a building, excluding balconies.

Forecourt A landscaped, semi-public area, open to the sky, formed by a recess in a central portion of a building facade.

Four-Plex A moderate floor plate, detached, residential building type with up to four dwelling units.

Front Setback The distance from the front lot line to the point where any structure may be constructed.

Frontage The area of a lot between the facade of a principal building and the primary front lot line, extending fully to each side lot line and including all built and landscape components.

Furniture Area An area of space that allows for the placement of furniture without restricting the movement of pedestrians.

G

Grade A reference plane representing the natural finished ground level of land.

Garage, Private An accessory building or portion of a principal building used or designed for the off-street parking of motor vehicles, accessory use from the home occupation accessory use category is carried on, unless such accessory use is specifically authorized elsewhere in this Ordinance.

Garden A planned space, set aside for the display, cultivation, and enjoyment of plants including vegetables, flowers, and fruits for private/personal use.

Garden, Community See §5 Uses Provisions.

Gardening, Community See §5 Uses Provisions.

Gardening, Residential See §5 Uses Provisions.

Grade A reference plane representing the natural or finished ground line of land.

Greenhouse A structure, primarily of transparent material, in which temperature and humidity can be controlled for the cultivation or protection of plants or other horticultural products.

Ground Coverage The percentage of lot area included within the outside lines of the exterior walls of all buildings located on the lot, except garages and carports in districts RA and RB, but including the area of porches, decks, breezeways, balconies and bay windows, patios, except patios not more than six (6) inches above grade.

Ground Floor The lowest floor of a building that is not considered a Basement.

Group Residence See §5 Uses Provisions.

H

Heat Island The higher average air temperatures of the local micro-climate due to the absorption, retention, and generation of heat by buildings, pavements, and human activities.

Hen A female domestic chicken.

High-Rise Any building taller than seventy (70) feet above mean grade.

Homeless Shelter A building providing sleeping facilities for individuals without a home of their own, with or without the provision of meals.

Honeybee A common domestic honeybee (Apis mellifera).

Hoop House A temporary structure typically made of, but not limited to, piping or other material covered with a translucent material for the purpose of growing food or ornamental crops

House A moderate floor plate, detached, residential building type with up to two vertically

stacked dwelling units.

House, Paired A moderate floor plate, semi-detached, residential building type with up to two vertically stacked dwelling units. A paired house is attached on one side to another paired house.

Hotel A commercial building(s) with guest rooms designed primarily for sleeping, and usually including a lobby, reception area, conference rooms, recreational amenities, and common kitchen cooking facility(-ies) providing meals for paying guests in a dining room(s) or restaurant(s).

Hydroculture The growing of plants in a soilless medium or an aquatic based environment.

Hydroponics A method of growing plants using a mineral-nutrient solution, without soil.

I

Infrastructure Physical installations, improvements, and utilities provided as part of the functional systems needed to serve development. Infrastructure may include police, fire, sanitation, health, and educational services and facilities. (Also see "Utility").

J

(none)

K

(none)

L

Lamp The source of illumination in a lighting fixture.

Landscaping The improvement of land, generally for use as passive outdoor space, through the planting and maintenance of live plants including trees, shrubs, ground cover, flowers, or other, low-growing plants that are native or adaptable to the urban climatic conditions of Somerville. In addition, the term landscaping may include some natural or manufactured materials including, but not limited to, reflecting pools, works of art, walkways, screens, walls, fences, and benches or street furniture. Up to twenty-five percent (25%) may include other non-living materials used as components of a plan for improving outdoor space, such as rocks, pebbles, sand, bark mulch, landscape pavers, earthen mounds. Landscaping excludes curbing and pavement for vehicular use.

Large Tree A woody plant with an expected mature height of thirty (30) feet of more.

Light Shelf A horizontal overhang placed in a window above eye level, which reflects daylight onto the ceiling and deeper into a room and providing shade near the window to reduce window glare.

Light Source The lamp and all refractive, reflective, and translucent light transmitting parts of an outdoor light fixture.

Loading Space An off-street space or berth on the same lot with a building or contiguous to a group of buildings for the temporary parking of a commercial vehicle while loading or unloading merchandise or materials, which abuts upon a street, alley, or other appropriate means of access.

Long-Term Bicycle Parking Accommodations for the parking of a bicycle for two or more hours.

Lot A bounded area of land with appropriate frontage on and undivided by a public way intended for the purpose of sale, legacy, or development at any time.

Lot Area The horizontal measurement of a lot in square feet, exclusive of any area in private way open to public use.

Lot, Corner A lot fronting two (2) or more thoroughfares at their intersection.

Lot, Flag A lot in the approximate configuration of a flag pole or sign post, with the pole or post functioning primarily as an access way to the main area of the lot from the thoroughfare providing access.

Lot, Interior A lot fronting one thoroughfare and abutting other lots at both sides.

Lot, Key A lot with a side lot line abutting the rear lot line of another lot.

Lot, Landlocked A bounded area of land with no frontage.

Lot, Pork Chop See Lot, Flag.

Lot, Through A lot fronting on two (2) or more thoroughfares, including parallel thoroughfares and

thoroughfares that do not intersect at the boundaries of the lot.

Lot Depth The horizontal distance between the front and rear lot lines measured in the mean direction of the side lot lines.

Lot Line The boundary that legally and geometrically demarcates a lot or parcel of land.

Lot Line Adjustment Reconfiguration of the boundary line between two adjacent lots or parcels of land, whether they are commonly owned or not and whether the resulting shift of ground from one parcel to another is minor or substantial.

Lot Line, Front The Any lot line abutting a thoroughfare, other than an alley, or civic space.

Lot Line, Party A side lot line shared between two attached or semi-detached building types.

Lot Line, Rear Any lot line which is parallel to or within forty-five (45) degrees of being parallel to a front lot line.

Lot Line, Side Any lot line other than a front or rear lot line.

Lot Merger The consolidation of two (2) or more adjacent lots or parcels of land and resulting elimination of the lot lines that previously separated them.

Lot Split The division of a lot or parcel of land into two (2) smaller lots or parcels of land.

Lot Width The length of the front lot line of a lot.

Luminaire A light unit or fixture including any bulb(s), tube(s), housing, reflective shield, lens and/or ballast.

M

Master Plan A document providing a basis for decision making regarding the long-term community development of the City of Somerville, as approved by the Planning Board per MGL 41, 81D.

Main Body The primary massing of a Principal Building Type.

Mixed-Use Building A multi-story building type with ground floor commercial uses and upper story residential with six or more dwelling units.

Mobile Home A structure, transportable in one (1) or more sections, which is eight (8) feet or more in width and is thirty-two (32) feet or more in length, and which is built on a permanent chassis, and designed to be used as a dwelling with a permanent foundation, when connected to the required utility and includes the plumbing, heating, air-conditioning and electrical systems contained therein.

Monopole A free-standing (or wire-supported) tower for wireless telecommunications facilities.

Mulch A protective covering consisting of organic materials customarily used in landscaping and placed around plants to retain soil moisture, retard erosion, shield roots from freezing, and inhibit weed growth.

Mystic River Bank The portion of land surface abutting and confining the Mystic River, as defined by 310 CMR 10.54.2.C, as amended.

N

Neighborhood Store A moderate floor plate, single story building type designed for commercial purposes.

Nonconformity An existing function, structure, lot, or site improvement that is in compliance with the zoning regulations that were applicable to it when it was established, and for which all required permits were issued but which does not conform in whole or in part to the regulations of this Ordinance. Such nonconformity is legal and may continue except as regulated by Article 11.

North-Facing Within 45 degrees of due north.

O

Office Space within a building for the transaction of general business, including administrative, professional, and clerical activities, but excluding retail, artisanal, and manufacturing.

Off Site Not on or within the area specified in any application under the terms of this Ordinance or not within other areas which, pursuant to this Ordinance, may be included in defining a site's purpose and boundaries.

On Site On or within the area specified in any application under the terms of this Ordinance, or within other areas which, pursuant to this Ordinance, may be included in defining a site's purpose and boundaries.

Open Space Land area accessible to and designed for public use or gathering.

Outdoor Cafe Seating Outdoor seating located in a frontage or on a public sidewalk that is provided with table service.

Outdoor Display The outdoor exhibition or presentation of products and merchandise available for sale.

Outdoor Light Fixture Outdoor artificial illuminating devices, outdoor fixtures, lamps, and other devices, permanent or portable, used for illumination or advertisement.

Outdoor Storage The storage of merchandise or material in boxes, in crates, on pallets or other kinds of shipping containers, garden supplies, building supplies, plants, vehicles, and other similar equipment, inventory, materials, merchandise, or supplies not normally brought indoors overnight.

Outdoor Storage Area A space outside of a building which is used to keep merchandise for use or sale, goods to be processed, or machinery for use.

P

Paired House See House, Paired.

Paired Triple Decker See Triple Decker, Paired.

Parcel A part or portion of land.

Parking Lot An uncovered area used or designed for the off-street parking of two (2) or more motor vehicles, excluding a driveway.

Parking Structure Any structure used or designed for the off-street parking of motor vehicles, excluding a private parking garage and a carport.

Parking, Tandem The parking of two (2) motor vehicles, one directly behind the other.

Patio A hard-surfaced amenity space having no permanent roof coverings, usually directly adjacent to a building, and constructed such that its finished walking surface is laid or poured directly on finished grade.

Paver A masonry block of various material or size.

Pervious Area (Permeable) The area of a lot covered by permeable, pervious, or pourous surfaces or materials that allow for the movement or passage of water into soils below, such as soil, mulch, vegetation, pavers, and green roofs.

Pier A section of a wall between windows or other adjacent openings.

Planning Board The Somerville Planning Board. See §10.G.

Planter a three (3) foot deep recessed soil bed provided for the planting of street trees and kept open to air and water flow through the use of landscaping or permeable or pervious pavers.

Planting Technique The prescribed method for planting street trees, either in a continuous planter or tree pit.

Plaza A civic space type designed for civic purposes and commercial activities, integrated as part of a block or lot or located internal to a block/lot, with landscape consisting primarily of pavement.

Pocket Park A civic space type designed for unstructured recreation, integrated as part of a block/lot or located internal to a block/lot, consisting of greenery and a place to sit outdoors and spatially defined by surrounding buildings.

Podium The lower portion(s) of certain high-rise buildings, limited in height and designed to minimize the impact of wind flows redirected by adjoining towers and to spatially define the public realm of nearby thoroughfares, private-owned public spaces, and civic spaces.

Point Tower A residential building type composed of apartments surrounding a central elevator core.

Porch A roofed or unroofed amenity space, usually structurally attached to or part of and having direct access to a building, but which is unheated and without air conditioning.

Pork Chop Lot See Lot, Flag.

Principal Building A building or structure designed, used, or occupied for the principal use(s) of a given lot or site.

Principal Entrance The main point of access for pedestrians into a building, upper story use, or ground floor tenant space.

Principal Use The main or primary purpose for which a structure, building, or lot is designed, arranged, licensed or intended, or for which it may be used, occupied, or maintained under this Ordinance.

Private Frontage The area between a building facade and the front lot line, inclusive of its built and planted components.

Production Building A moderate to large floor plate, up to two story building type, often naturally lit with a

monitor or sawtooth roof.

Property Any land, building, or other structure, or part thereof.

Public Common A civic space type for unstructured recreation, free standing in the block pattern with landscape consisting of lawns, paths, and trees.

Public Square A civic space type for unstructured recreation and civic purposes, free standing in the block pattern, with landscape consisting of formally disposed lawns, paths, and trees.

Q

(none)

R

Rail Right-of-Way The way for any rail service, including, but not limited to, the rail tracks, guideways, overhead power lines, and shoulder.

Rear Setback The horizontal distance from a rear lot line to the location of structures or use on a lot, measured perpendicularly from the lot line. This area must be maintained clear of permanent structures with the exception of encroachments.

Regional Uses catering to patrons originating from locations both within the City of Somerville and elsewhere in the Boston metropolitan area.

Residential High-Rise A high-rise building type limited to residential uses on the upper floors.

Retaining Wall A wall that holds the earth at one side at a higher elevation than the earth on the other side.

Rezoning An amendment to the Official Zoning Map.

Roof, Flat A roof that has no slope greater than 2:12.

Roof, Gambrel A gable-ended roof with two slopes on each of its sides, where the lower slope is at a steeper angle than the upper.

Roof Line The highest point on any building or structure where an exterior wall or parapet wall encloses roof or floor area, including floor area provided for housing mechanical equipment.

S

Sand-Bases Structural Soil System (SBSS) A soil system of open graded crushed stone over Sand-Bases Structural Soil.

Self-Storage Facility A facility where individual secured areas inside of a structure are rented for short-term storage of a variety of non-hazardous, non-perishable durable goods and where the lessee has direct access and responsibility for loading and unloading the storage.

Setback A horizontal distance from a lot line to the location of structures or uses of a lot, measured perpendicularly from the lot line. This area must be maintained clear of permanent structures with the exception of encroachments.

Setback Area The land area of a lot between a minimum and maximum setback or build-to line.

Short-Term Bicycle Parking Accommodations for the parking of a bicycle for two hours or less.

Shopfront A private frontage conventional for retail use with substantial glazing wherein the facade is aligned close to the frontage line with the building entrance at sidewalk grade.

Shop House A moderate floor plate, detached building type with ground story retail and one dwelling unit designed to appear as a house.

Shrub A multi-stemmed, woody plant with a five-gallon container size when planted.

Sign Any permanent or temporary name, identification, description, emblem, logo, structure, or device, that is illuminated or non-illuminated; visible or intended to be visible from any public place; and directs attention to a person, product, place, activity, institution, business, organization, activity, or service including any letter, numeral, character, figure, emblem, painting, illustration, banner, pennant, placard, or temporary sign designed to advertise, identify, solicit, or convey information. Signs include devices designed to attract the eye by intermittent or repeated motion and any permanently installed or situated merchandise, including any banner, pennant, placard, or temporary sign, with the exception of window displays. Flags of the United States and the Commonwealth of Massachusetts are not signs.

Sign Band A wall area of a non-residential building built along the entire width of a principal or secondary frontage allocated for the placement of a sign above a shopfront or at the cornice.

Site A lot or parcel occupied or planned for occupation by a use, including structures and other improvements to the land.

Six-Plex A moderate floor plate, detached, residential building type with up to six dwelling units.

Slope The ratio of vertical to horizontal distance.

Small Tree A woody plant with an expected mature height of thirty (30) feet or less.

Soil Volume An amount of soil provided for a tree, calculated as the horizontal area of open or covered soil multiplied by three (3) feet of depth.

Spatial Daylight Autonomy (sDA) A calculation describing the percentage of floor area of a interior space that receives a specified level of luminance for a minimum percentage of the time that the space is occupied on an annual basis.

Step-back The recess of an upper story facade a set distance behind the facade of the story below.

Stoop A private frontage wherein the facade is aligned close to the frontage line with the first story elevated from the sidewalk for privacy and with an exterior stair and landing at the entrance.

Stallriser A section of wall below a storefront display window.

Story A portion of a building between the upper surface of a floor and the upper surface of the floor or roof next above.

Street A thoroughfare, avenue, road, highway, boulevard, parkway, driveway, lane, court or private easement for use by vehicular and pedestrian traffic and providing access to lots and open spaces.

Street Tree A tree planted within the furnishing zone as a element of a thoroughfare.

Structure Any constructed, erected or placed material or combination of materials in or upon the ground, including, but not by way of limitation, buildings, mobile units, radio towers, sheds, signs, storage bins and swimming pools, but excluding sidewalks and paving on streets, driveways, parking areas, and patios. The word "structure" is construed, where the context allows, as though followed by the words "or part thereof."

Solar Reflectance Index (SRI): A measure of a surface's ability to reflect solar heat, as shown by a small temperature rise. Numerically, standard black is 0 and standard white is 100.

Structural Cells A subsurface system that supports the weight of sidewalks and other paved surfaces and is filled with uncompacted soil.

Subdivision, Major The division of a lot, tract, or parcel of land into two (2) or more lots, building sites, or other divisions for the purpose of sale, legacy, or development at any time, where a new thoroughfare or way is needed to provide access to the lots which would otherwise be landlocked.

Substantial Modification Alterations or repairs to a building or structure, within any twelve (12) month time period, costing in excess of fifty (50) percent of the physical value of the building or structure. Physical value of a building or structure is based on the assessed value as recorded in the Assessor's Office of the City of Somerville.

Superintendent The Superintendent of Inspectional Services or their designee.

Suspended Pavement pavement slabs spanning supports that allow soil under sidewalks and other paved surfaces to remain uncompacted.

T

Tandem Parking See "Parking, Tandem"

Terminated Vista A location at the axial conclusion of a thoroughfare.

Thoroughfare A public or private way for use by vehicular and pedestrian traffic and providing access to lots and open spaces.

Tower Any portion of a high-rise building above seventy (70) feet.

Transportation Demand Management A broad range of strategies intended to reduce automobile trips. The alteration of travel behavior through programs of incentives, services, and policies, including encouraging the use of alternatives to single-occupant vehicles such as public transit, cycling, walking, carpooling/ vanpooling and changes in work schedule that move trips out of the peak period or eliminate them altogether.

Tree Pit A thee (3) foot deep pit filled with soil for the planting and growth of a street tree. Tree pits have surface area open to air and water flow.

Trip Reduction Reducing in the number of work-related trips made by single-occupant vehicles.

Triple Decker A moderate floor plate, detached, residential building type with three vertically stacked dwelling units.

Triple Decker, Paired A moderate floor plate, semi-detached, residential building type with three vertically

stacked dwelling units. A paired triple decker is attached on one side to another paired triple decker.

U

Upper Story Setback The horizontal distance that a designated portion of a building is set back from a lot line.

Urban Agriculture See Agriculture, Urban

Use The purpose or activity for which land or structures thereon is designed, arranged or intended to be occupied or used, or for which it is occupied, maintained, rented, or leased.

Use, Accessory A use that is determined by the building official to be accessory.

Use, By Right The identified principal use of a building type requiring only zoning plan review by the Building Official.

Use, Permitted Any use of a building type listed as a principal use by right, a home occupation, an accessory use, and any use approved by special permit or variance according to this Ordinance.

Use, Principal The main or primary purpose for which land and the structures thereon are used, or for which land and the structures thereon may be maintained or occupied according to this Ordinance.

Use, Temporary A use established for a fixed period of time with the intent to discontinue such use upon expiration of the time period.

Use Category

Utility, Major

Utility, Minor

V

Variance A departure from the strict terms or expressed provisions of this Ordinance, where such departure is authorized in accordance with Section 10 of Chapter 40A of the Massachusetts General Laws.

W

Waiver A predetermined type of deviation, within specific limitations, from the block, lot, and/or thoroughfare provisions for of a specific district in this Ordinance.

Warehousing The depositing or securing of goods, wares, and merchandise in a warehouse.

Wholesale The sale, resale, warehousing, or distribution of products to retailers and/or other businesses.

Window Sign A logo inscribed on storefront glass. See X.

Wireless Communications The provision of the following types of services: cellular telephone service; personal communications; and extended specialized mobile radio service. Such essential services will be provided via wireless communications facilities, which shall include monopoles, rooftop antennas, satellite dishes, and cell sites.

Wireless Communications Antenna An antenna, dish, or cell site attached to a wireless communications tower, principal building, or other accessory structure that is used to transmit or receive wireless communications signals.

Wireless Communications Tower A structure or structures intended to support equipment that is used to transmit and/or receive wireless communications signals including towers, monopoles, cell sites, and other guyed and lattice construction steel structures that are freestanding and not attached to an principal building type or accessory structure.

X

(none)

Y

Yard A landscaped amenity space, open and unobstructed from the ground, on the same lot

as a building.

Z

Zoning Board The Somerville Zoning Board of Appeals. See §10G.